Raupenkran/Crawler Crane
LR 1800-1.0

Vorläufig
Preliminary

LIEBHERR

Inhaltsverzeichnis
Table of content

Technische Daten **Technical Data**	
Ausstattung Equipment	4 – 5
Maße Dimensions	6 – 9
Krandaten Crane data	10
Transportplan Transportation plan	11 – 12
Weltweit wirtschaftlicher Transport Economic transport worldwide	13
Highlights Highlights	14 – 15
Schwebeballast V-frame Suspended ballast V-frame	16
Auslegersysteme Boom/jib combinations	17
SL	18 – 19
HSLDB/HSLDBV	20 – 22
S	23 – 24
HSDB/HSDBV	25 – 27
HSDWB	28 – 40
Beispiel Wmax Example Wmax	41
Symbolerklärung Description of symbols	42 – 43
Anmerkungen Remarks	44

Ausstattung
Equipment

Max. Tragkraft	650 t bei 12 m Ausladung. HSDB – System mit HS2 60 m.
Max. Lastmoment	11.200 tm – 548 t bei 18 m Ausladung. HSDB – System mit HS2 42 m und D 31,5 m.

Raupenfahrwerk

Fahrwerk	Liebherr-Raupenfahrwerk, bestehend aus einem Mittelstück und zwei Raupenträgern mit Raupenplatten 2 m (optional 1,5 m) und 4-fach Antrieb.
Zentralballast	2 Konsolen à 5 t. Gesamtzentralballast 70 t. 6 Ballastplatten à 10 t (Option).

Kranoberwagen

Drehbühnen-rahmen	Liebherr-Drehbühnenrahmen, bestehend aus Drehbühne mit Winde IV und abnehmbaren A-Bock, verbunden mit dem Raupenmittelteil über eine Rollendrehverbindung.
Kranmotor mit Geräusch-isolierung	Liebherr 8-Zylinder-Diesel, Typ D9508 A7, wassergekühlt, Leistung 455 kW (618 PS) bei 1700 min^{-1}, max. Drehmoment 2824 Nm bei 1350 min^{-1}. Kraftstoffbehälter: ca. 1100 l. Abgasemissionen entsprechend Richtlinie (EU) 2016/1628, EPA/CARB oder ECE-R.96.
Winde I	Standard Hubwinde, hydraulisch angetrieben mit Axialkolben-Verstellmotor mit integriertem Planetengetriebe.
Winde IV	Einziehwerk
Einscherwinde	Hilfswinde zum Einscheren der Seile.
Drehwerk	2 Drehwerke mit integriertem Planetengetriebe, hydraulisch angetrieben durch Axialkolben-Verstellmotor.
Krankabine	Klimatisierte Krankabine nach hinten neigbar mit Sicherheitsverglasung, wärmedämmendes Glas, Dachfenster mit Panzerglas, genormte Steuereinheiten ergonomisch angeordnet. Thermostatisch geregelte Warmwasser-Zusatzheizung.
Kransteuerung	Eingabe der Konfigurationsdaten durch einfache interaktive Funktionen. Alle Kranbewegungen werden durch drei 4-Wege Meisterschalter sowie zwei 2-Wege Hand-/Fußhebel gesteuert. Alle Arbeitsbewegungen können unabhängig voneinander angesteuert werden.
Sicherheitsein-richtungen	Hubendschalter, Sicherheitsventile gegen Schlauch- und Rohrbruch. Seiltrommel-Endschaltung mit 3 Sicherheitswindungen. Windwarnanlage. Elektronische Neigungsanzeige. Flugwarnleuchte.
Kamera-Überwachung	2 Farbmonitore, 4 Kameras für Winden, Drehbühne seitlich und Heckbereich.
Gegengewicht	2 Konsolen mit je 15 t. Gesamtgegengewicht 230 t. 20 Ballastplatten à 10 t.

Auslegersysteme

Hauptausleger HS	System 3330/2826 mit Kopfstück für max. Tragkraft von 650 t. Auslegerlänge HS 36 m – 90 m. Auslegerlänge HSDB 36 m – 126 m mit Derricksystem.
Hauptausleger (H)SL	System 3330/2724/2420 mit Kopfstück für max. Tragkraft von 450 t. Auslegerlänge SL 30 m – 114 m, HSLDB 36 m – 180 m.
Wippbare Gitterspitze W	System 2724/2420 mit Kopfstück für max. Tragkraft von 450 t. Wippspitzenlängen W 18 m – 102 m. Für Wippspitzenbetrieb ist Winde V erforderlich.
Derricksystem D	System 2524 einschließlich Abspannstangen. Für Derrickbetrieb ist die Winde III erforderlich. Länge 33 m / 39 m.
Ballastpalette B	Für max. Derrickballast von 400 t und stufenlos variable Radien von 11 m – 18 m.
Derrickballast	Platten mit Gesamtgewicht von 400 t.
Winde II	2. Hubwinde.
Winde III	Verstellung Hauptausleger/Derrickbetrieb.
Winde V	Verstellung wippbare Gitterspitze.
Winde VI	Hilfshubwerk.
Mastnase 25 t	Zum Anbau am S oder L Kopf.

Zusatzausrüstung

Mechanische Zusatzabstütz-zung	Zum Aufrichten von langen Auslegerkombinationen ohne Derrickballast.
Hydraulische Montage-abstützung	Anheben des Grundgeräts zum Auf-/Abbau. Bestehend aus 4 Abstützzylindern einschließlich Abstützplatten, angebaut an Zentralballastkonsolen.
Hydraulischer Montagezylinder	Zur Selbstmontage/Demontage des Raupenfahrwerks.
Bolzenzieh-einrichtung	Einschließlich mobilem Hydraulikaggregat. Für das Einschieben und Herausziehen der Bolzen der S- und L-Zwischenstücke.

Weitere Zusatzausrüstungen auf Anfrage.
Serienausrüstung und Optionen entsprechend aktueller Preisliste.

Die Abbildungen enthalten auch Zubehör und Sonderausstattungen, die nicht zum serienmäßigen Lieferumfang gehören.

Ausstattung
Equipment

Max. capacity	650 t at 12 m radius HSDB – System with HS2 60 m.
Max. load moment	11.200 tm – 548 t at 18 m radius. HSDB – System with HS2 42 m and D 31.5 m.

Crawler travel gear

Crawler chassis	Liebherr crawler chassis consisting of one centre section and two crawler carriers with crawler plates 2 m (optional 1.5 m) and quadruple drive.
Central ballast	2 brackets 5 t each. Total central ballast 70 t. 6 ballast plates 10 t each (option).

Crane superstructure

Superstructure frame	Liebherr-slewing platform frame, consisting of slewing platform with winch IV and removable A-frame, connected to the centre section by a roller slewing bearing.
Crane engine with sound insulation	8-cylinder diesel engine, make Liebherr, type D9508 A7, water cooled, rated power 455 kW (618 h.p.) at 1700 min^{-1}, max torque 2824 Nm at 1350 min^{-1}. Fuel tank approx. 1100 l, exhaust emissions acc. to (EU) 2016/1628, EPA/CARB or ECE-R.96.
Winch I	Standard hoist winch, hydraulically driven with variable axial piston motor with integrated planetary gear.
Winch IV	Boom hoist.
Reeving winch	Auxiliary winch for the reeving of ropes.
Slewing gear	2 slewing gears with integrated planetary gear hydraulically driven by axial piston variable motor.
Crane cabin	Air conditioned crane cabin tiltable to the rear with safety glazing, heat insulating glass, roof window with bullet proof glass, standardized control units ergonomically positioned. Additional thermostatically controlled hot water heating.
Crane control	Setting of configuration data by convenient interactive functions. All crane movements are initiated by means of three 4-way joystick hand levers and two 2-way hand/foot levers. All working movements are independently controllable.
Safety devices	Hoist limit switch. Safety valves against hose and pipe rupture. Drum switch limit at 3 rest layers. Wind speed gauge. Electronic inclination indicator. Aircraft warning control light.
Camera observation	2 colour monitors, 4 cameras for winches, slewing platform side and rear.
Counterweight	2 brackets 15 t each. Total counterweight at superstructure 230 t. 20 ballast plates 10 t each.

Boom system

Main boom HS	System 3330/2826 with head section for max. 650 t load capacity. Boom length HS 36 m – 90 m. Boom length HSDB 36 m – 90 m with derrick system.
Main boom (H) SL	System 3330/2724/2420 with head section for max. 450 t load capacity. Boom length SL 30 m – 114 m. Boom length HSLDB 36 m – 180 m .
Lattice type luffing fly jib W	System 2724/2420 with head section for max. 450 t load capacity. Luffing jib lengths W 18 – 102 m. Winch V is needed for all luffing jib operations.
Derrick system D	System 2524 including guy rods. Winch III is needed for all derrick operations. Length 33 m / 39 m.
Counterweight frame B	For max. derrick counterweight of 400 t, for infinitely variable radius from 11 m – 18 m.
Derrick-Counterweight	Plates for a total of 400 t.
Winch II	Second hoist winch.
Winch III	Reeving main boom / Derrick operation.
Winch V	Luffing for W-jib configuration.
Winch VI	Auxiliary hoist gear.
Whip line 25 t	For attaching to the S or L head.

Additional equipment

Mechanical outriggers	For erection of long boom combinations without derrick-counterweight.
Hydraulic assembly jacks	Lifting of the basic machine for assembly/disassembly. Consisting of 4 support cylinders including support plates, mounted on central ballast consoles.
Hydraulic assembly cylinder	For assembly/disassembly of the crawler carrier by the crane itself.
Pin pulling device	Including mobile hydraulic aggregate. For assembly/disassembly of the pins at S and L intermediate sections.

Other items of equipment available on request.
Standard equipment and options according to effective price list.

The pictures contain also accessories and special equipment not included in the standard scope of delivery.

Maße
Dimensions

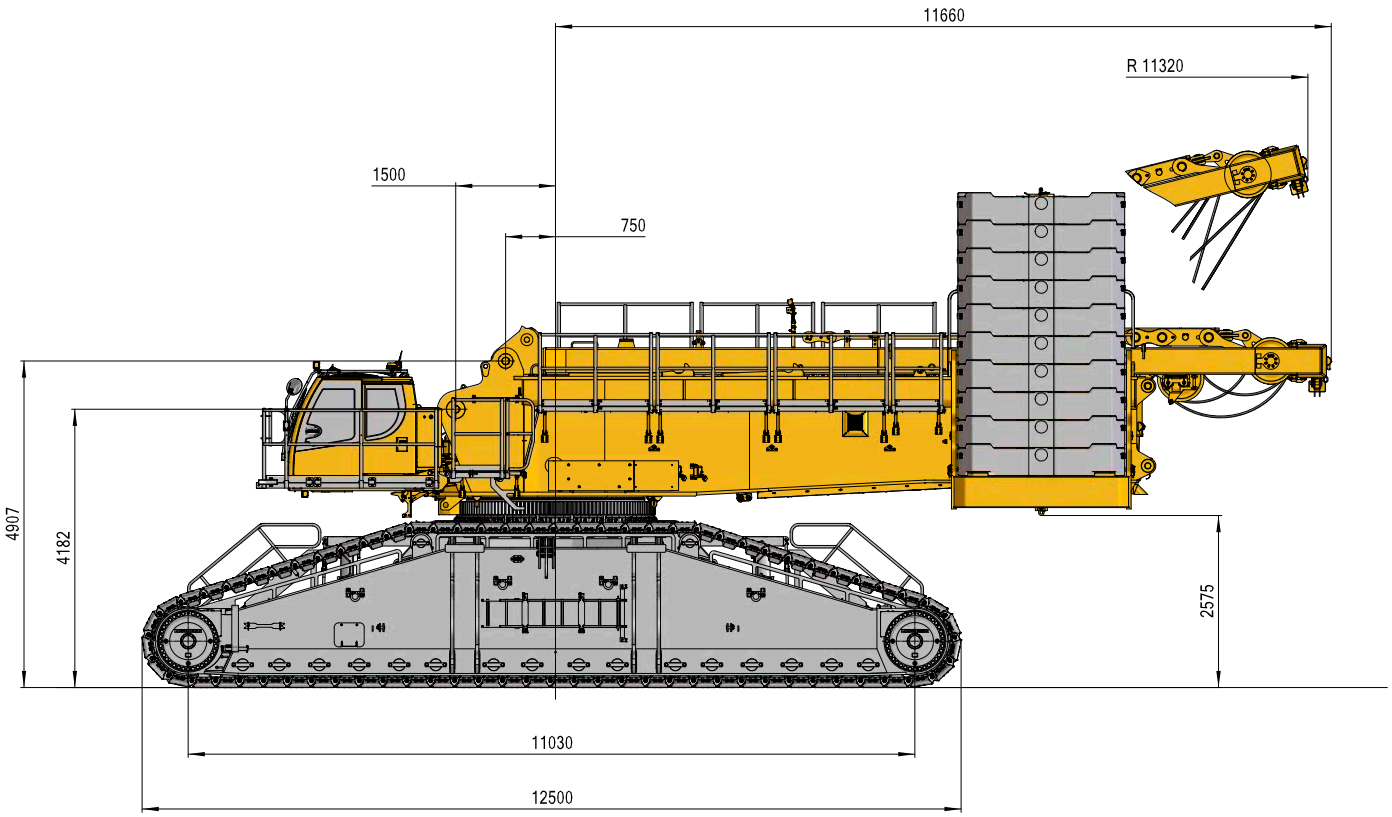

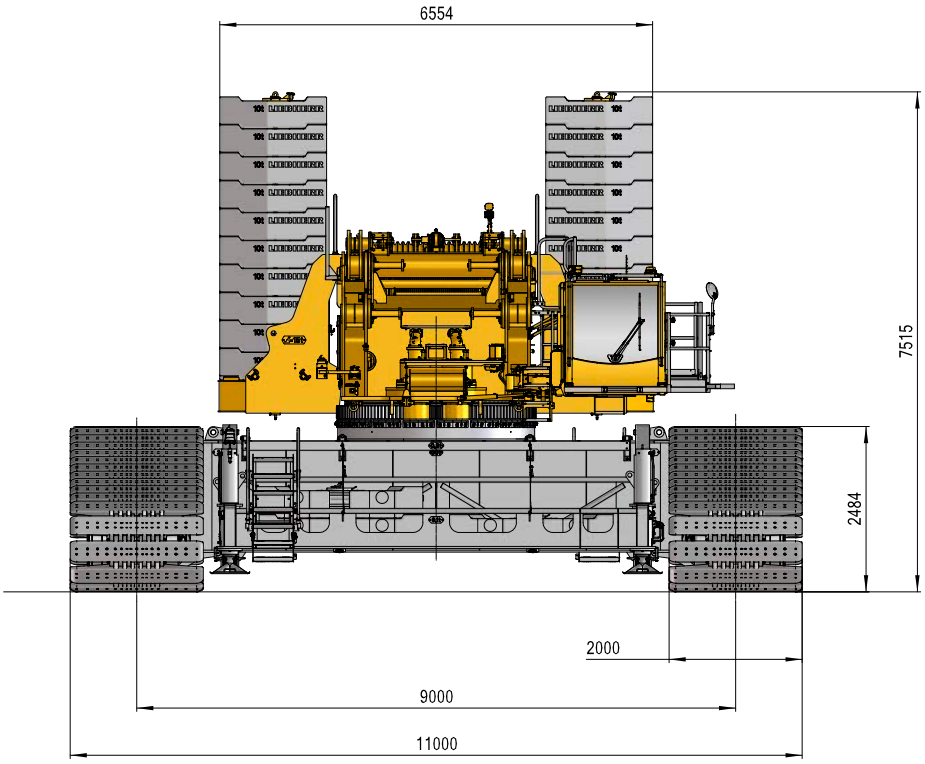

S272-0018-00

Maße
Dimensions

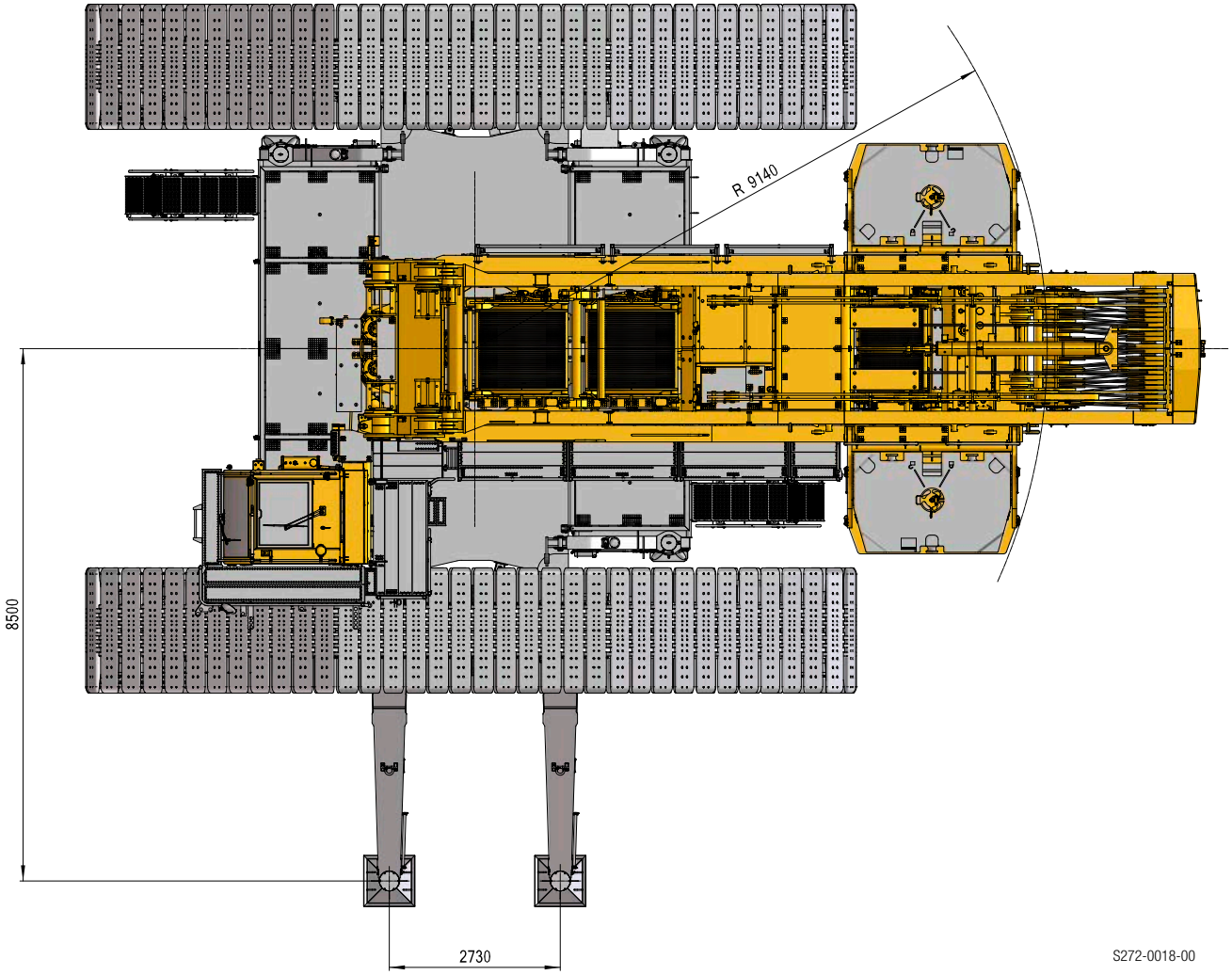

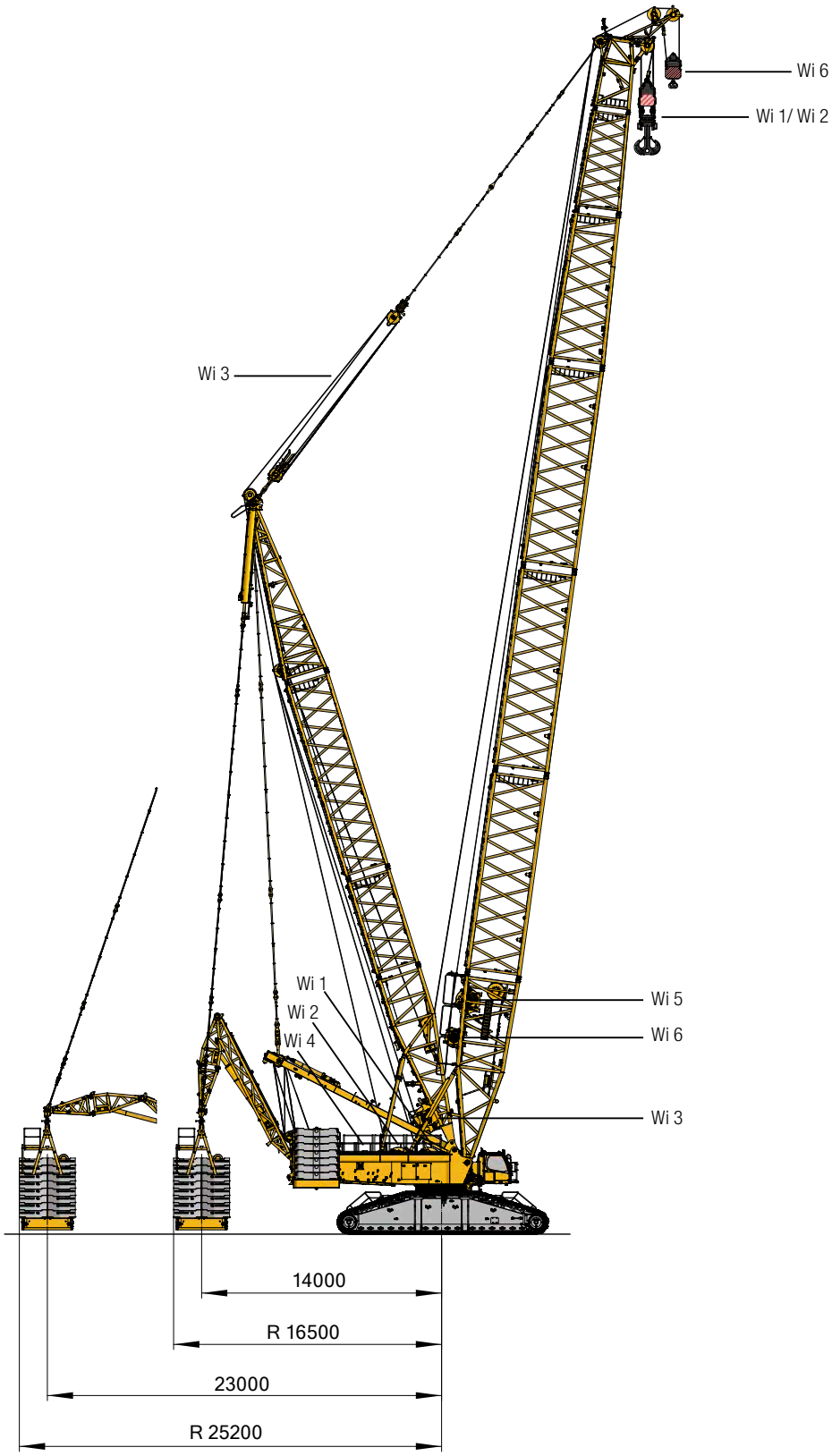

S272-0016-00

Wi = Winde · winch · treuil · argano · cabrestante · лебедка

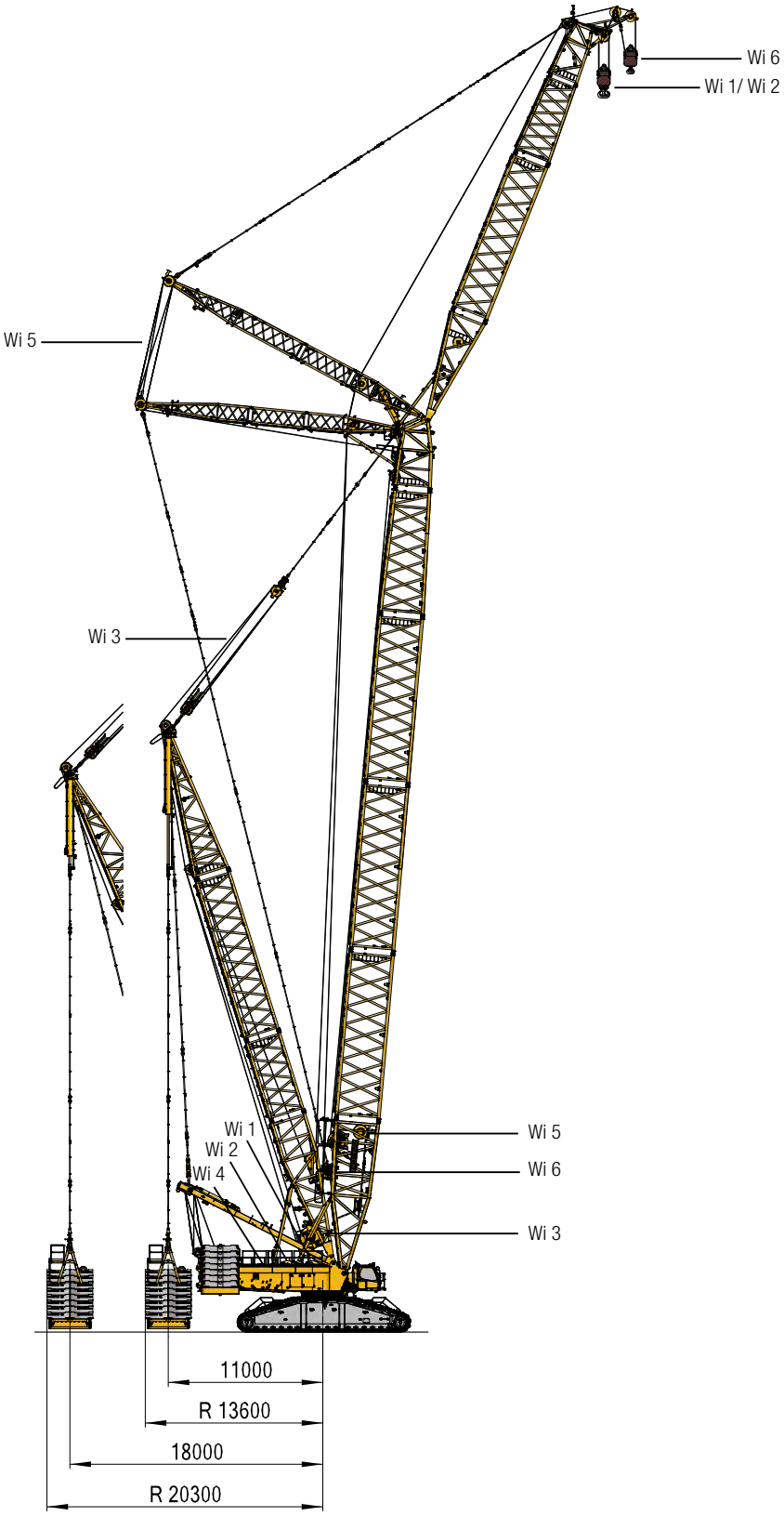

S272-0017-00

Wi = Winde · winch · treuil · argano · cabrestante · лебедка

Krandaten
Crane data

Winden/Winches

	$V_{m/min}$	F	Ø	
1	0 – 114 m/min	200 kN	30 mm	1300 m
2	0 – 114 m/min	200 kN	30 mm	1300 m
3	0 – 125 m/min	–	–	–
4	0 – 2 x 75 m/min	–	–	–
5	0 – 135 m/min	–	–	–
6	0 – 137 m/min	125 kN	25 mm	600 m

Geschwindigkeiten/Working speeds

360°	Drehgeschwindigkeiten / Slewing speeds	0 – 0,67 min^{-1}
km/h	Fahrgeschwindigkeiten / Travel speeds	0 – 1,5 km/h

Hakenflaschen/Hook blocks

	max	Ø			
700 / 350 t	800 / 400 t	30 mm	2 x 9	2 x 19	16 – 26 / 12 – 22 t
560 / 280 t	650 / 325 t	30 mm	2 x 7	2 x 15	14 – 22 / 10 – 18 t
270 / 135 t	320 / 160 t	30 mm	2 x 3	2 x 7	4,7 – 12,7 / 3,4 – 11,4 t
210 t	250 t	30 mm	5	11	3,0 – 11,0 t
135 t	160 t	30 mm	3	7	2,5 – 8,5 t
60 t	80 t	30 mm	1	3	2,5 – 4,5 t
20 t	25 t	30 mm	–	1	1,5 t

Einscherplan/Reeving chart

	1	2	3	4	5	6	7	8	9	10	11	12	13	14	15	16	17	18	19
max	20	40	59	79	98	118	137	155	174	193	211	229	247	264	282	299	317	333	350
20 t	■																		
60 t	■	■	■																
135 t	■	■	■	■	■	■	■												
210 t	■	■	■	■	■	■	■	■	■	■	■								
280 t	■	■	■	■	■	■	■	■	■	■	■	■	■	■	■				
350 t	■	■	■	■	■	■	■	■	■	■	■	■	■	■	■	■	■	■	■

	2 x 3	2 x 4	2 x 5	2 x 6	2 x 7	2 x 8	2 x 9	2 x 10	2 x 11	2 x 12	2 x 13	2 x 14	2 x 15	2 x 16	2 x 17	2 x 18	2 x 19
max	119	159	197	236	274	311	325	386	422	458	494	529	565	599	634	667	701
270 t	■	■	■	■	■												
560 t			■	■	■	■	■	■	■	■	■	■	■				
700 t			■	■	■	■	■	■	■	■	■	■	■	■	■	■	■

Transportplan
Transportation plan

Drehbühne und Raupenmittelteil mit Quick Connection,
SA-Bock, Winde 4

Superstructure and crawler center section with quick connection,
SA-frame, winch 4

96,6 t

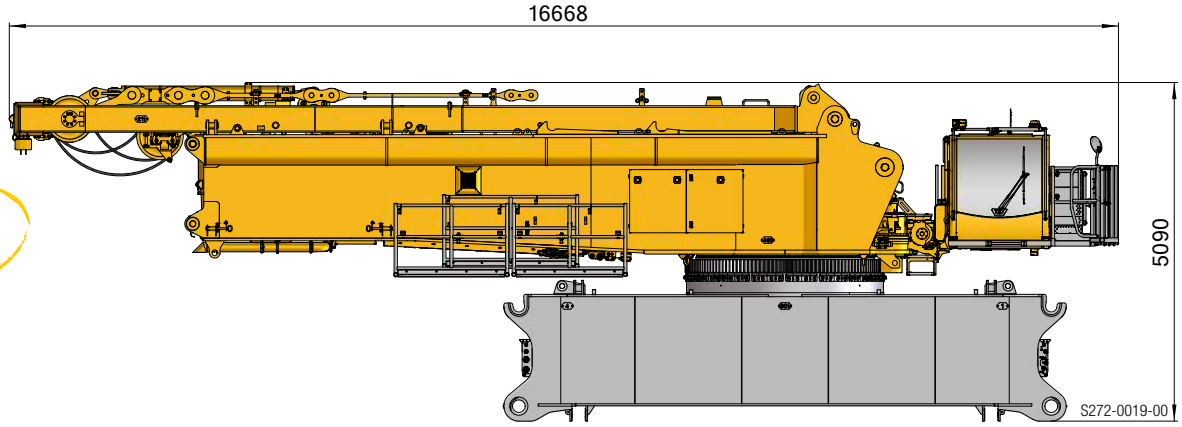

Drehbühne mit SA-Bock, Winde 4, Quick Connection, 2 Drehwerken
Superstructure with SA-frame, winch 4, quick connection, 2 slewing gears

68,3 t

incl. (1) 1,7 t

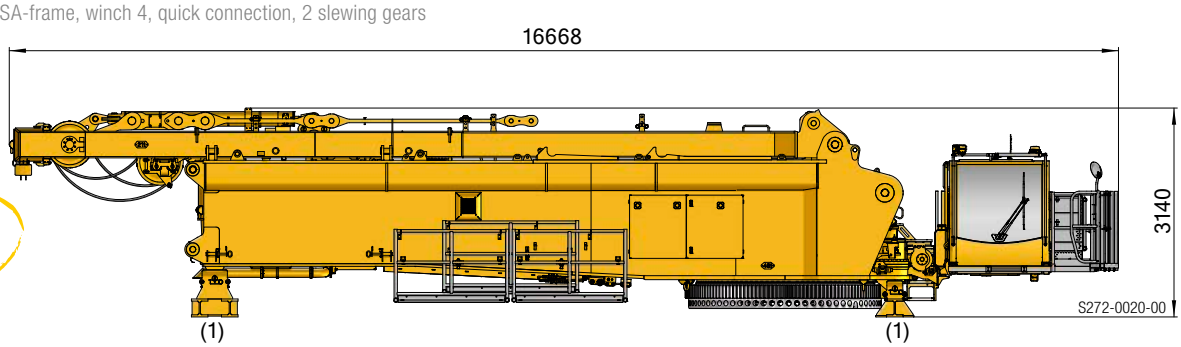

Raupenmittelteil, Quick Connection
Crawler middle section, quick connection

30,9 t

incl. (2) 0,9 t

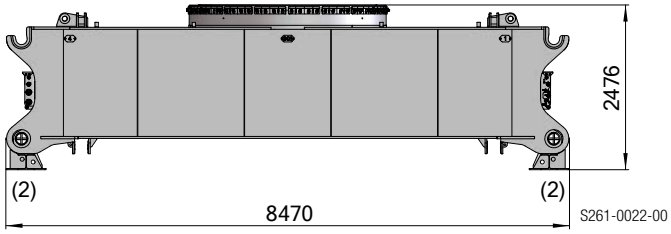

Raupenträger mit 2 Fahrgetrieben
Crawler with 2 drive gear(s)

60 t

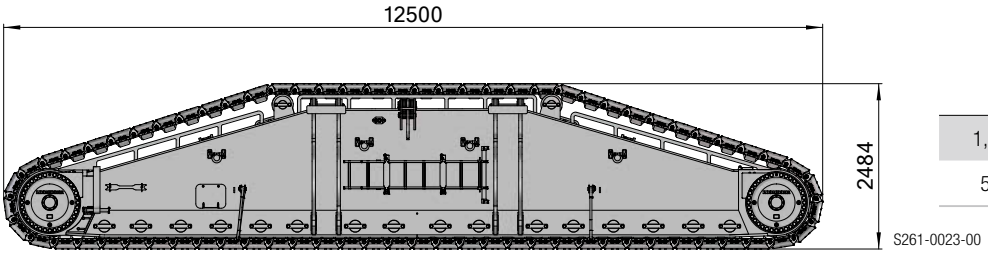

Bodenplatten
Crawler shoes

1,5 m	2 m
50 t	60 t

Transportplan
Transportation plan

Drehbühne mit Quick Connection
Superstructure with quick connection

48,3 t

incl. (1) 1,7 t

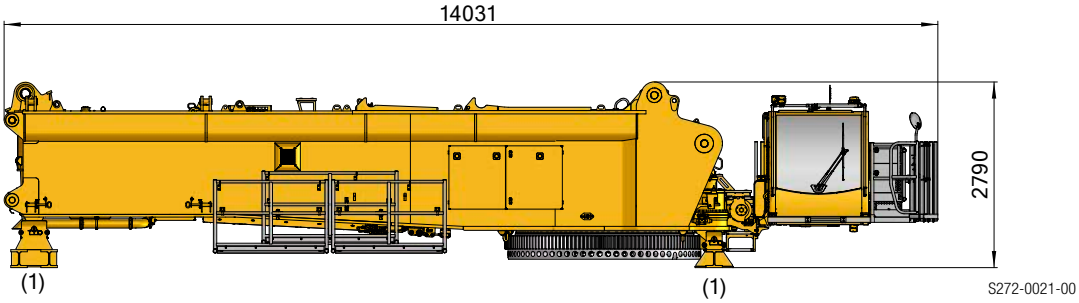

SA-Bock, Winde 4 inkl. Seil und Rollensatz
SA-frame, winch 4 incl. rope and pulley block

21,6 t

incl. (3) 1,6 t

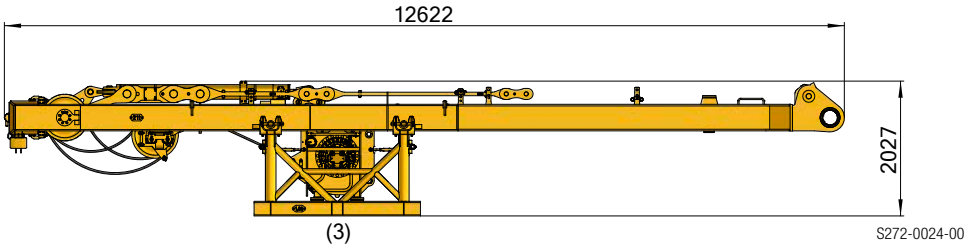

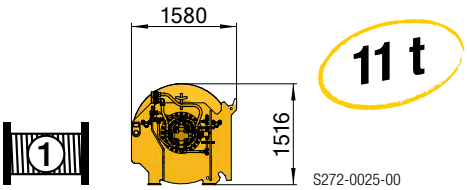

11 t

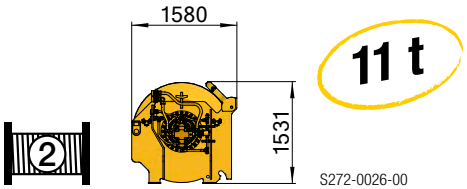

11 t

Weltweit wirtschaftlicher Transport
Economic transport worldwide

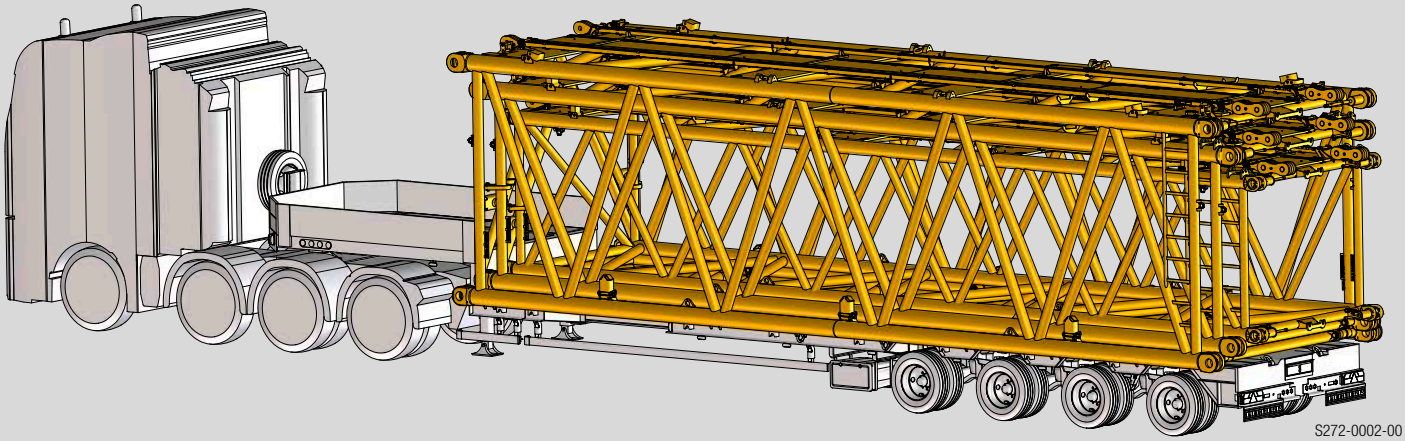

S272-0002-00

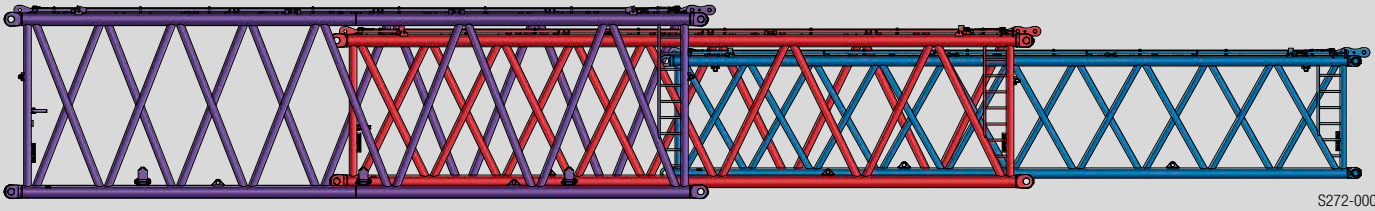

S272-0003-00

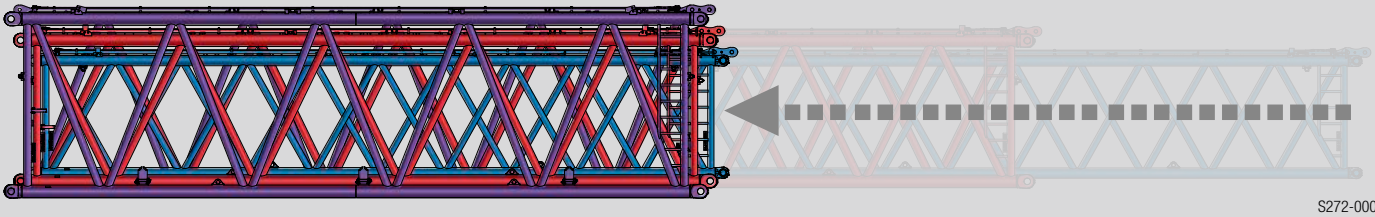

S272-0004-00

3x HSL 12 m

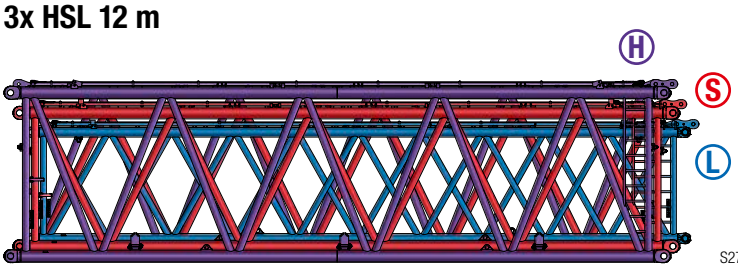

S272-0004-00

HSL 6 m

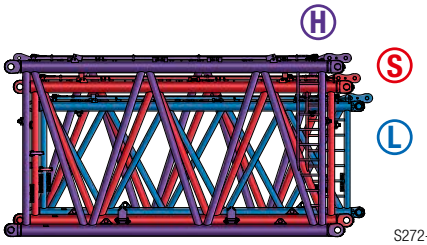

S272-0005-00

HS-Reduzierstück inkl. SL-Reduzierstück
HS-reduction section incl. SL-reduction section

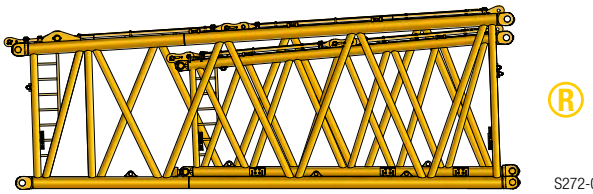

S272-0007-00

Highlights
Highlights

Drehbühnenballast-Konsole mit integrierter 10 t Ballastplatte (Gesamtgewicht: 15 t)

Superstructure counterweight brackets with integrated 10 t ballast plate (total: 15 t)

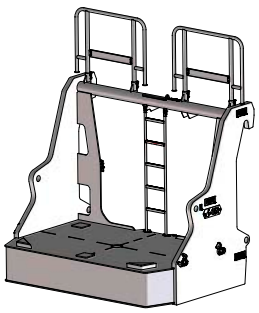

Optionaler V-frame für Derrickballastradius 14 – 23 m

Optional V-frame for 14 – 23 m derrick counterweight radius

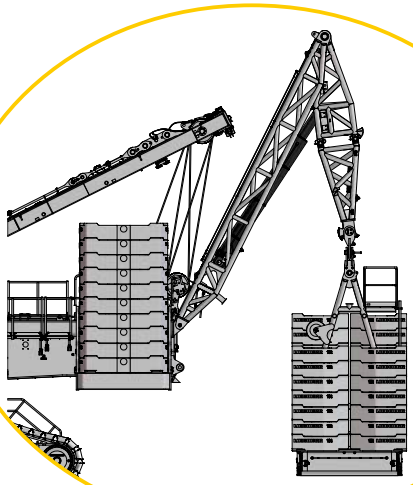

400 t Derrickballast optional VarioTray

400 t derrick counterweight optional VarioTray

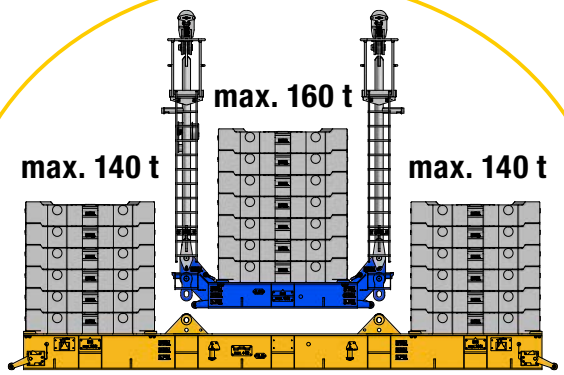

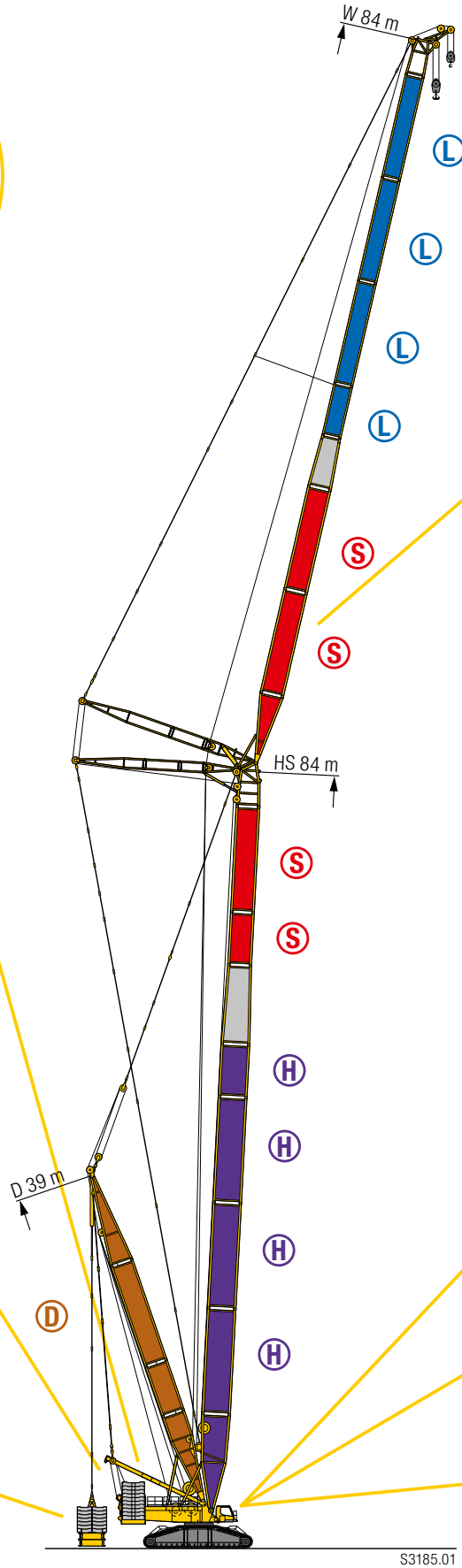

Starke Wippspitze basierend auf dem S-System
Strong luffer based on S-system

Zentalballast-Konsole mit integrierten Montagezylindern
Central counterweight brackets with integrated assembly cylinders

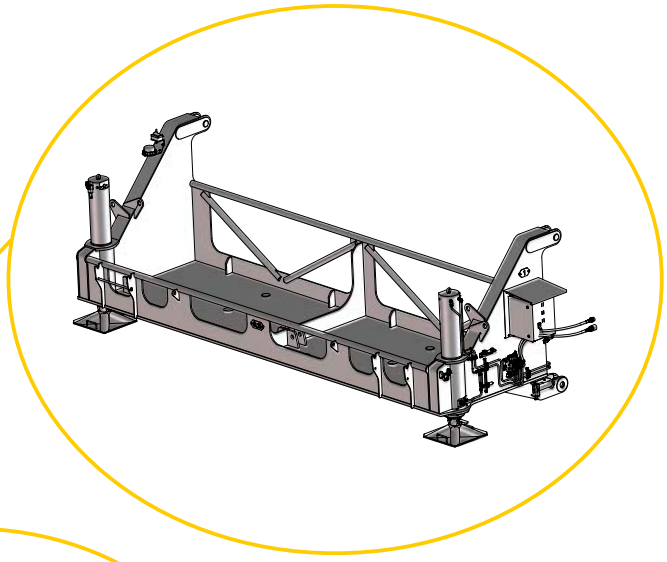

3 m Raupenmittelteil Standard mit Quick Connection
3 m crawler middle section with standard Quick Connection

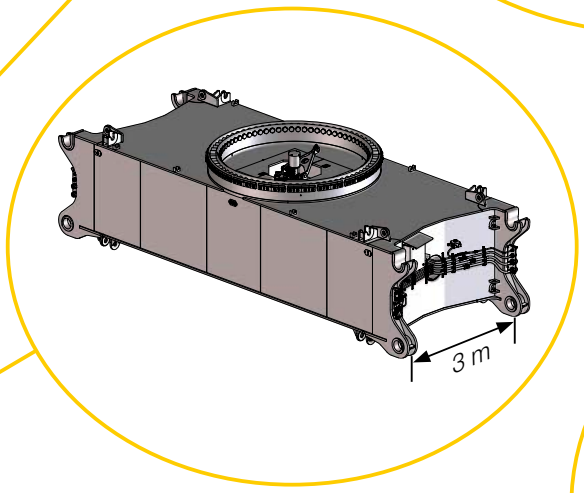

Standard 2 m Raupenplatten
Standard 4-fach Antrieb
Standrad 2 m track shoes
Standrad 4-fold drive

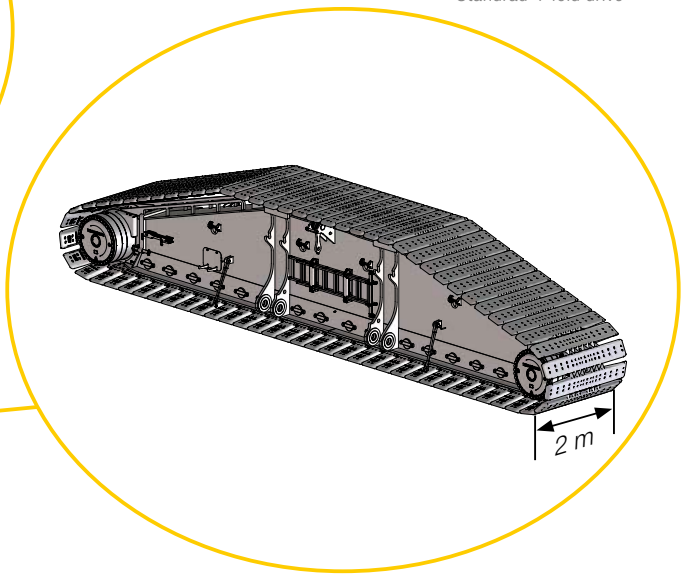

Schwebeballast V-frame
Suspended ballast V-frame

- Verstellweg 14 – 23 m
- Automatisiertes Nachführen der Derrickzylinder (nur eine Steuerbewegung)
- Interpolierte Traglasttabellenwerte

- Adjustment distance 14 – 23 m
- Automated tracking of the derrick cylinders (one control movement only)
- Interpolated load chart tables

Auslegersysteme
Boom/jib combinations

H
S
L
D

S/HS Hauptausleger, schwer
Main boom, heavy

SL/HSL Hauptausleger, schwer/leicht
Main boom, heavy/light

D Derrickausleger
Derrick

W Wippbare Gitterspitze, schwer
Luffin fly jib, heavy

BV Schwebeballast V-frame
Suspended ballast V-frame

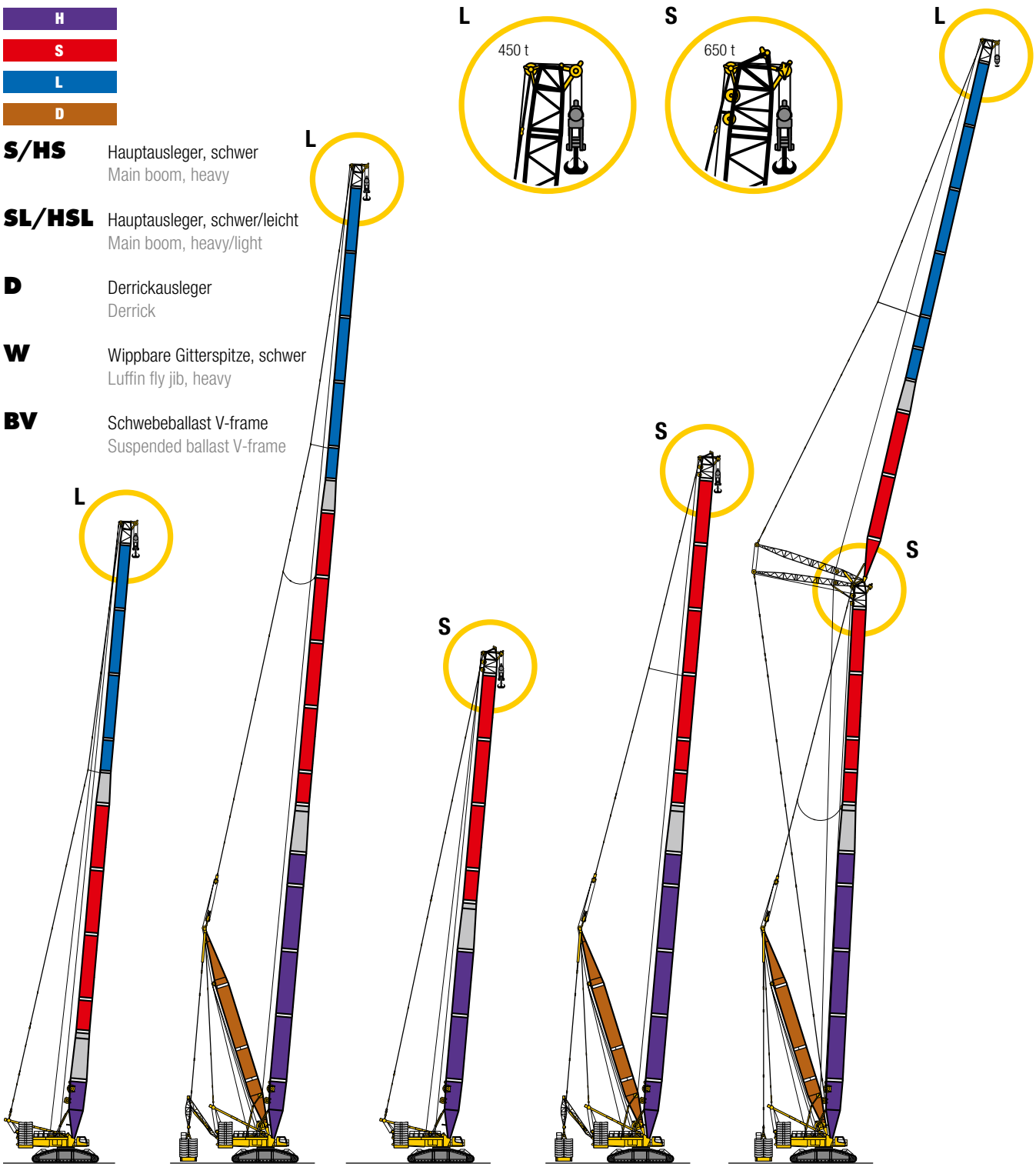

SL
SL 30 m – 114 m
18 – 19

HSLDB
HSLDBV
HSL 36m – 180 m
D 39m
20 – 22

S
S 36 m – 90 m
23 – 24

HSDB
HSDBV
HS 36 m – 126 m
D 39 m
25 – 27

HSDWB
HS 42 m – 108 m
W 18 m – 102 m
D 39 m
28 – 40

S3285

SL 30 – 114

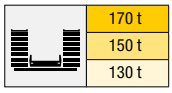

Vorläufig
Preliminary

m	SL 30 – 114															m
	30 m	36 m	42 m	48 m	54 m	60 m	66 m	72 m	78 m	84 m	90 m	96 m	102 m	108 m	114 m	
6	450															6
7	450	450	450													7
8	450	450	450	450	450											8
9	450	450	450	450	450	445										9
10	441	441	441	433	435	414	393	376								10
11	410	408	403	403	391	372	355	340	327	175						11
12	370	368	367	366	353	338	323	309	301	285	245					12
14	311	308	308	306	295	283	272	262	255	247	232	217	189	153	129	14
16	266	264	263	261	252	243	233	225	221	214	209	202	184	148	124	16
18	231	230	229	226	219	211	203	196	193	187	184	178	174	143	120	18
20	203	202	201	199	193	186	179	173	171	166	163	158	155	137	115	20
22	178	177	177	175	172	166	160	154	153	148	146	142	139	131	111	22
24	156	157	155	154	153	149	143	138	138	134	132	128	125	121	107	24
26	139	139	138	137	135	133	130	125	125	121	119	116	113	110	102	26
28		124	124	122	121	119	117	114	113	110	109	105	103	100	97,2	28
30		113	112	111	109	107	105	103	104	100	99,3	96,2	94,3	91,3	89,8	30
32		102	102	100	99,1	97	94,9	93,2	95	91,8	91	88,1	86,4	83,5	82,3	32
34			93	91,5	90,5	88,1	86,1	84,7	86,1	84,3	83,7	80,9	79,4	76,7	75,5	34
36			85,4	83,5	82,3	80,4	78,2	77	78,5	77	77,3	74,5	73	70,5	69,5	36
38				77	75,7	73,8	71,7	70,2	71,8	70,3	71	68,8	67,4	64,9	64	38
40				71,1	69,4	67,6	65,9	64,2	65,7	64,3	65	63,5	62,3	59,8	59	40
44					59,4	57,6	55,9	54,3	55,6	54,1	55	53,8	53,1	51,1	50,5	44
48					51,5	49,5	47,7	46	47,6	45,9	46,5	45,3	45,1	43,7	43,2	48
52						42,8	41	39,1	40,7	39,2	39,8	38,4	38	37,1	36,9	52
56							35,3	33,5	34,8	33,2	34,1	32,5	32,1	31,2	31,1	56
60								28,7	30	28,3	29	27,7	27,1	26,1	26	60
64									25,8	24,1	24,7	23,3	22,9	21,8	21,7	64
68									22,2	20,4	21	19,5	18,9	18,1	18	68
72										17,1	17,7	16,2	15,7	14,6	14,7	72
76											14,9	13,3	12,8	11,7	11,6	76
80												10,8	10,1	9,1	9	80
84													7,8	6,8	6,5	84
88													5,7			88

Hubhöhen
Lifting heights

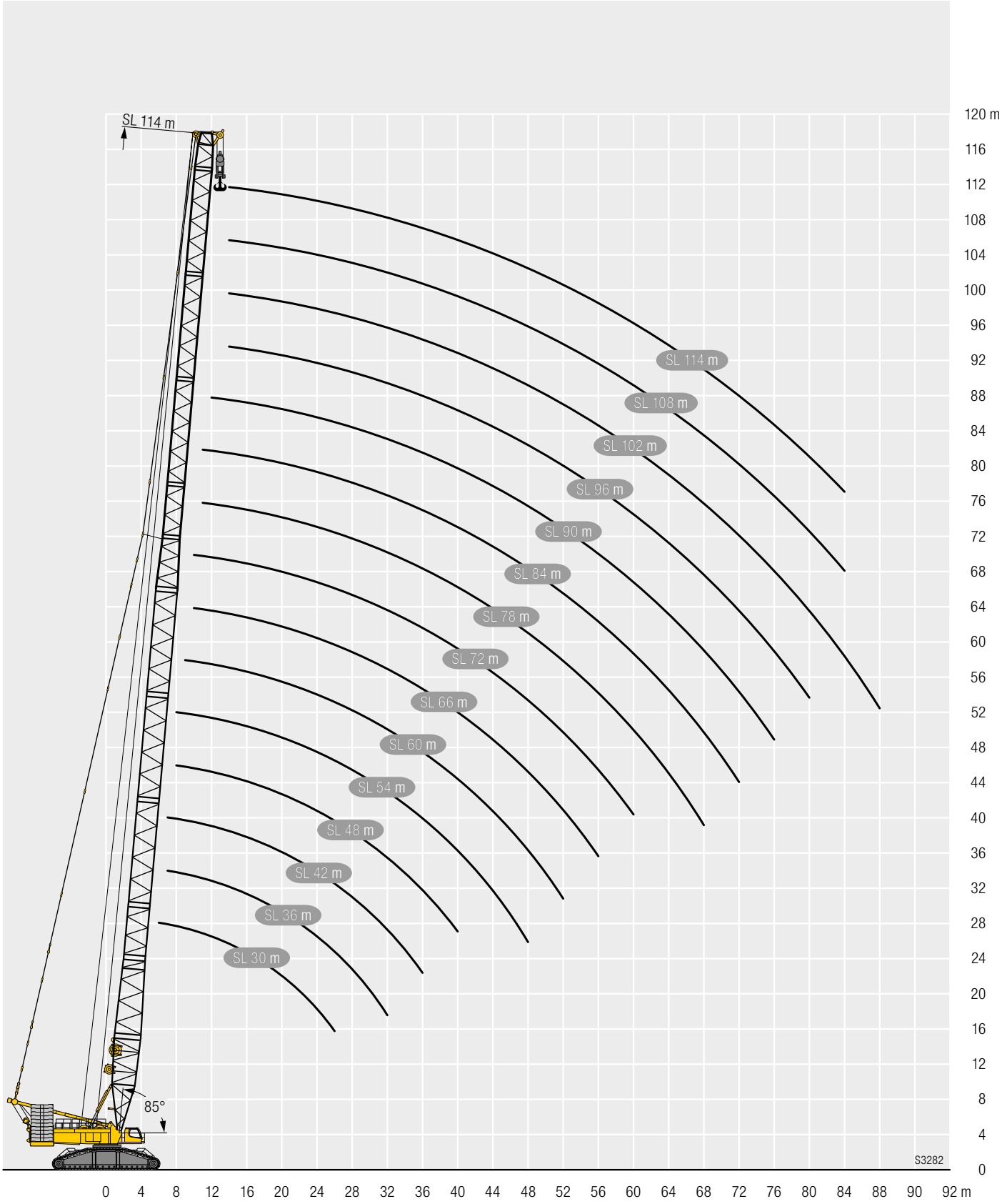

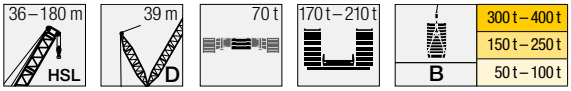

Vorläufig
Preliminary

		HSL 36 – 180																								
	m	36 m	42 m	48 m	54 m	60 m	66 m	72 m	78 m	84 m	90 m	96 m	102 m	108 m	114 m	120 m	126 m	132 m	138 m	144 m	150 m	156 m	162 m	168 m	174 m	180 m
7	0t	450																								
	B	450																								
	BV																									
8	0t	450	450	450																						
	B	450	450	450																						
	BV	450	450	450																						
9	0t	450	450	450	450																					
	B	450	450	450	450																					
	BV	450	450	450	450																					
10	0t	443	440	430	409	399	378																			
	B	450	450	450	450	450	450																			
	BV	450	450	450	450	450	450																			
11	0t	397	395	384	366	359	340	326																		
	B	450	450	450	450	450	450	450																		
	BV	450	450	450	450	450	450	450																		
12	0t	360	357	345	330	325	309	296	284	307																
	B	450	450	450	450	450	450	450	450	450																
	BV	450	450	450	450	450	450	450	450	450																
14	0t	301	298	286	275	271	260	249	239	261	251	244	234													
	B	450	450	450	450	450	450	450	450	450	420	378	340													
	BV	450	450	450	450	450	450	450	450	450	430	385	345													
16	0t	259	253	243	234	232	222	213	205	225	217	211	203	198	191	186										
	B	450	450	450	450	450	450	450	450	450	419	376	339	305	274	245										
	BV	450	450	450	450	450	450	450	450	450	431	386	345	309	277	247										
18	0t	224	219	210	203	201	193	185	178	196	190	184	178	173	167	163	160	158	153	143						
	B	450	450	450	450	450	450	450	450	450	418	375	337	304	273	245	218	192	167	145						
	BV	450	450	450	450	450	450	450	450	450	432	386	346	309	277	247	215	187	167							
20	0t	195	191	185	178	176	169	163	157	173	168	163	158	153	148	145	142	140	136	134	123	106	101			
	B	440	435	429	431	448	450	448	440	438	413	374	333	303	272	244	217	191	165	144	123	106	101			
	BV	450	450	450	450	450	450	450	450	450	422	384	346	309	277	247	215	187	167	133	115	99,9	101			
22	0t	170	169	164	158	156	150	144	139	154	149	145	140	137	131	129	127	125	122	120	116	104	99	87		
	B	399	396	393	392	428	425	419	411	413	395	371	323	302	272	243	215	189	164	142	122	105	99,5	87,2		
	BV	450	450	450	450	450	450	450	449	432	398	370	343	309	277	247	215	187	166	134	115	100	101	84,6	72,1	58,1
24	0t	150	148	146	141	140	134	129	124	138	134	130	125	122	117	115	114	112	109	108	104	100	96	85,7		
	B	365	361	359	357	393	388	384	379	381	373	358	316	299	270	240	213	187	162	140	121	103	98	86		
	BV	438	449	450	449	442	442	434	423	407	376	351	338	309	277	246	215	187	165	133	115	100	99,3	84,7	72,4	58,4
26	0t	133	131	130	127	126	121	115	111	124	120	117	113	110	105	104	102	101	98,4	96,9	93,9	93,1	87,7	83,1		
	B	335	333	330	328	361	358	353	350	353	345	337	305	293	267	236	210	184	159	138	118	101	96,6	84,8		
	BV	403	432	432	430	420	414	406	398	386	357	333	326	301	276	246	216	187	163	133	114	99,6	98,1	84,7	72,7	58,7
28	0t	119	117	116	114	114	109	104	99,9	112	109	106	102	99,3	94,9	93,3	92,4	91	88,8	87,5	84,9	84,1	78,9	76,7		
	B	310	308	305	303	333	331	328	324	327	321	313	297	286	262	233	206	181	157	137	116	99,5	95,1	83,6		
	BV	360	395	400	398	392	387	382	374	366	340	317	312	288	269	246	216	187	161	132	114	99,4	96,7	84,7	72,4	59
30	0t	107	106	104	103	104	98,9	94,3	90,3	102	98,5	95,8	92	89,8	85,6	84,2	83,5	82,4	80,3	79,3	76,7	76	71,2	68,9		
	B	288	286	284	281	310	307	304	301	304	299	293	283	274	256	227	203	178	154	134	114	97,6	93,6	82,5		
	BV	322	359	372	370	365	361	358	353	346	325	304	300	277	258	243	215	186	159	132	114	99,3	95,1	83,9	71,4	59,1
32	0t	97,4	95,3	94,1	93,1	94	90	85,7	81,8	92,8	89,5	87,1	83,4	81,4	77,4	76,2	75,6	74,7	72,7	71,9	69,4	69	64,1	61,9		
	B	268	266	264	262	289	286	283	281	284	280	274	266	261	247	222	199	174	151	132	112	96,1	91,7	81,3		
	BV	286	326	345	346	341	338	334	331	327	312	292	288	267	249	234	212	183	156	132	114	98	93,4	82,7	70,4	59,1
34	0t		86,9	85,5	84,5	85,2	82,3	78,1	74,4	84,7	81,6	79,3	75,8	73,9	70,1	69	68,5	67,7	65,8	65,2	62,8	62,6	57,6	55,8		
	B		249	247	246	270	267	265	262	266	263	257	250	246	236	218	196	171	147	130	110	94,5	89,9	79,8		
	BV		297	318	324	319	317	314	311	308	299	281	277	257	240	226	209	181	154	132	113	96,4	91,7	81,3	69,3	59,1
36	0t		79,6	77,8	76,7	77,4	75,3	71,3	67,8	77,5	74,6	72,3	68,9	67,2	63,5	62,6	62,1	61,5	59,8	59,2	56,9	56,7	52	50,1		
	B		234	231	230	254	251	248	246	249	247	242	236	232	224	213	191	168	145	127	109	92,6	88,1	78,3		
	BV		269	292	304	300	297	295	292	290	285	271	267	249	232	219	205	178	151	132	112	94,6	89,9	79,9	68,1	58,7
38	0t			71,4	70,2	70,8	68,5	65,2	61,8	71	68,2	66,2	62,8	61,1	57,5	56,7	56,3	55,8	54,2	53,6	51,6	51,4	46,8	44,9		
	B			218	216	239	236	233	231	234	232	228	222	219	212	205	185	164	142	125	107	90,7	86,3	76,8		
	BV			270	283	284	281	278	275	273	269	260	256	240	225	212	201	175	148	131	110	92,8	88,2	78,4	66,8	58,1
40	0t			65,4	64,1	64,5	62,4	59,8	56,4	65,1	62,4	60,5	57,4	55,6	52,1	51,4	51,1	50,6	49,2	48,6	46,6	46,6	41,9	40,2		
	B			206	204	225	223	220	218	221	218	215	210	207	201	197	182	161	138	123	104	88,8	84,4	75,3		
	BV			248	263	267	265	262	260	258	254	249	245	233	217	206	195	172	146	129	108	91	86,5	77	65,4	57,1
44	0t				54,2	54,2	52,3	50,2	47,1	55	52,4	50,6	47,6	46,1	42,8	42,1	41,9	41,5	40,2	39,9	38	38	33,5	31,8		
	B				183	202	200	197	195	197	194	191	187	185	181	178	172	153	132	118	100	85,1	80,8	72,2		
	BV				228	238	236	234	232	230	228	225	221	215	204	194	184	166	140	124	104	87,4	83	74	62,7	54,9
48	0t				46,2	45,8	43,7	41,7	39,4	46,6	44	42,2	39,4	38,1	34,9	34,3	34,3	33,8	32,7	32,4	30,6	30,8	26,3	24,7		
	B				165	182	180	178	176	176	174	172	168	166	162	161	158	147	126	113	96,2	81,3	77,3	69,1		
	BV				195	214	212	210	209	207	204	203	200	197	190	183	174	161	135	120	99,7	83,6	79,5	71,1	60,1	52,8
52	0t					38,9	37,1	34,6	32,6	39,4	37	35,3	32,5	31,2	28	27,6	27,6	27,3	26,3	25,9	24,2	24,5	20,1	18,5		
	B					166	164	161	159	159	157	155	152	150	147	145	144	140	120	108	91	77,5	73,8	66,1		
	BV					194	192	190	188	187	184	184	181	179	175	171	164	154	129	115	95,6	79,9	76,1	68,1	57,4	50,6
56	0t						31,2	28,9	26,9	33	30,9	29,3	26,6	25,2	22,1	21,8	21,8	21,6	20,6	20,4	18,8	19	14,6	13,2		
	B						149	147	145	143	142	141	138	136	133	132	131	129	114	103	86,8	74,2	70,7	63,1		
	BV						175	173	171	169	168	167	164	163	159	158	154	148	124	111	91,9	76,4	72,8	65,1	54,7	48,4

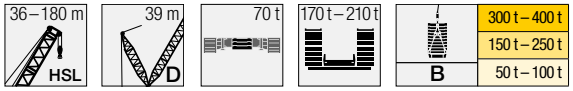

Vorläufig
Preliminary

		HSL 36 – 180																									
	m	36 m	42 m	48 m	54 m	60 m	66 m	72 m	78 m	84 m	90 m	96 m	102 m	108 m	114 m	120 m	126 m	132 m	138 m	144 m	150 m	156 m	162 m	168 m	174 m	180 m
60	0t							24	22	27,5	25,7	24,1	21,4	20	17	16,7	16,8	16,6	15,6	15,5	13,9	14,2	9,9	8,4		
	B							134	132	131	129	128	126	124	121	120	119	118	109	98,3	82,7	70,8	67,4	60,3		
	BV							158	156	154	152	152	148	149	145	144	143	140	120	108	88,3	73,1	69,8	62,2	52,1	46,3
64	0t								17,6	22,8	21,1	19,5	16,9	15,6	12,6	12,3	12,3	12,2	11,2	11,2	9,6	10				
	B								121	119	117	117	115	114	110	109	109	108	104	94,9	78,8	67	63,9	57,3		
	BV								143	142	140	139	132	137	134	133	132	131	115	104	85	70,1	66,8	59,4	49,7	44,3
68	0t								14,2	18,6	17	15,6	12,9	11,6	8,7	8,3	8,4	8,2	7,3	7,3	5,8					
	B								111	109	108	107	105	104	101	100	99,6	98,8	97,3	91,3	76	64,1	61,4	54		
	BV								132	130	128	128	117	126	123	122	122	121	111	100	81,9	67,2	64,1	56,8	47,4	42,4
72	0t									15,2	13,4	12,1	9,5	8,1												
	B									101	98,8	97,8	96	95,4	92,8	92,2	91,4	90,7	89,2	86,9	72,3	61,5	58,3	51,7		
	BV									121	118	118	106	115	113	113	112	111	107	97	78,8	64,6	61,6	54,3	45,4	40,6
76	0t										10,3	9,1	6,4													
	B										90,9	89,9	88,1	87,4	85,1	84,6	84,3	83,5	82	81,3	69,3	58,3	56	49,6		
	BV										110	109	97,3	106	104	104	104	103	101	93,8	75,9	62	59,2	52	43,4	38,9
80	0t											6,4														
	B											82,9	81	80,3	78,1	77,8	77,5	77	75,5	75,1	67	55,9	53,8	47		
	BV											101	90,2	98,3	96,1	96,1	96,3	95,8	94,2	90,5	73,2	59,5	57	49,8	41,6	37,3
84	0t																									
	B												74,8	73,9	71,7	71,6	71,5	70,8	69,8	69,3	64,6	53,5	51,4	44,9		
	BV												84,5	90,9	88,8	88,7	89,1	88,6	87,7	86,1	70,7	57,3	54,8	47,8	39,8	35,8
88	0t																									
	B												69,1	68,1	65,9	65,8	66	65,4	64,2	63,9	61,3	51,4	49,7	42,9		
	BV												80,5	84,3	82,1	82	82,4	82,3	81,2	80,4	68,4	55,3	52,9	45,8	38,2	34,4
92	0t																									
	B													62,8	60,7	60,5	60,7	60,4	59,3	58,7	57	49,8	47,9	40,8		
	BV													78,3	76,1	76	76,3	76,4	75,5	74,8	66,2	53,3	51,1	44	36,6	33
96	0t																									
	B														55,9	55,6	55,8	55,6	54,7	54,2	52,7	48,4	45,7	39,4		
	BV														70,7	70,6	70,8	70,8	70,2	69,7	64	51,5	49,4	42,4	35,2	31,6
100	0t																									
	B															51,2	51,3	51,1	50,4	50	48,7	46,6	43,2	38,2		
	BV															65,5	65,6	65,6	65,1	64,9	61,4	49,8	47,8	40,9	33,8	30,4
104	0t																									
	B															47,3	47,2	47	46,5	46	44,8	44	40,6	37		
	BV															61	60,9	60,8	60,4	60,3	58,7	48,2	46,2	39,4	32,6	29,2
108	0t																									
	B																43,5	43,2	42,6	42,4	41,1	40,8	37,6	35,4		
	BV																56,7	56,5	55,9	56	55,7	46,8	44,9	38	31,4	28,2
112	0t																									
	B																	39,6	39,1	38,9	37,9	37,7	34,3	32,9		
	BV																	52,5	52	51,8	51,9	45,4	43,7	36,8	30,3	27,2
116	0t																									
	B																		35,8	35,7	34,7	34,7	31,1	29,8		
	BV																		48,2	48,1	48,1	44,3	42,2	35,6	29,3	26,2
120	0t																									
	B																			32,6	31,7	31,8	28,2	26,8		
	BV																			44,6	44,6	43	39,8	34,5	28,4	25,3
124	0t																									
	B																			29,8	28,9	29	25,5	24,2		
	BV																			41,4	41,2	40,8	37,1	33,3	27,5	24,5
128	0t																									
	B																				26,2	26,3	22,9	21,6		
	BV																				38,1	37,7	34,3	32	26,7	23,6
132	0t																									
	B																					23,8	20,7	19,4		
	BV																					34,8	31,5	30,4	26	22,9
136	0t																									
	B																						18,6	17,6		
	BV																						28,7	27,7	25,2	22,3
140	0t																									
	B																							15,9		
	BV																							25,1	23,3	21,6
144	0t																									
	B																							14,2		
	BV																							22,7	21,5	20,3
148	0t																									
	B																									
	BV																								19,7	19
152	0t																									
	B																									
	BV																									17,5

005_HSLDB_033_HSLDBV

Hubhöhen
Lifting heights

HSLDB/HSLDBV

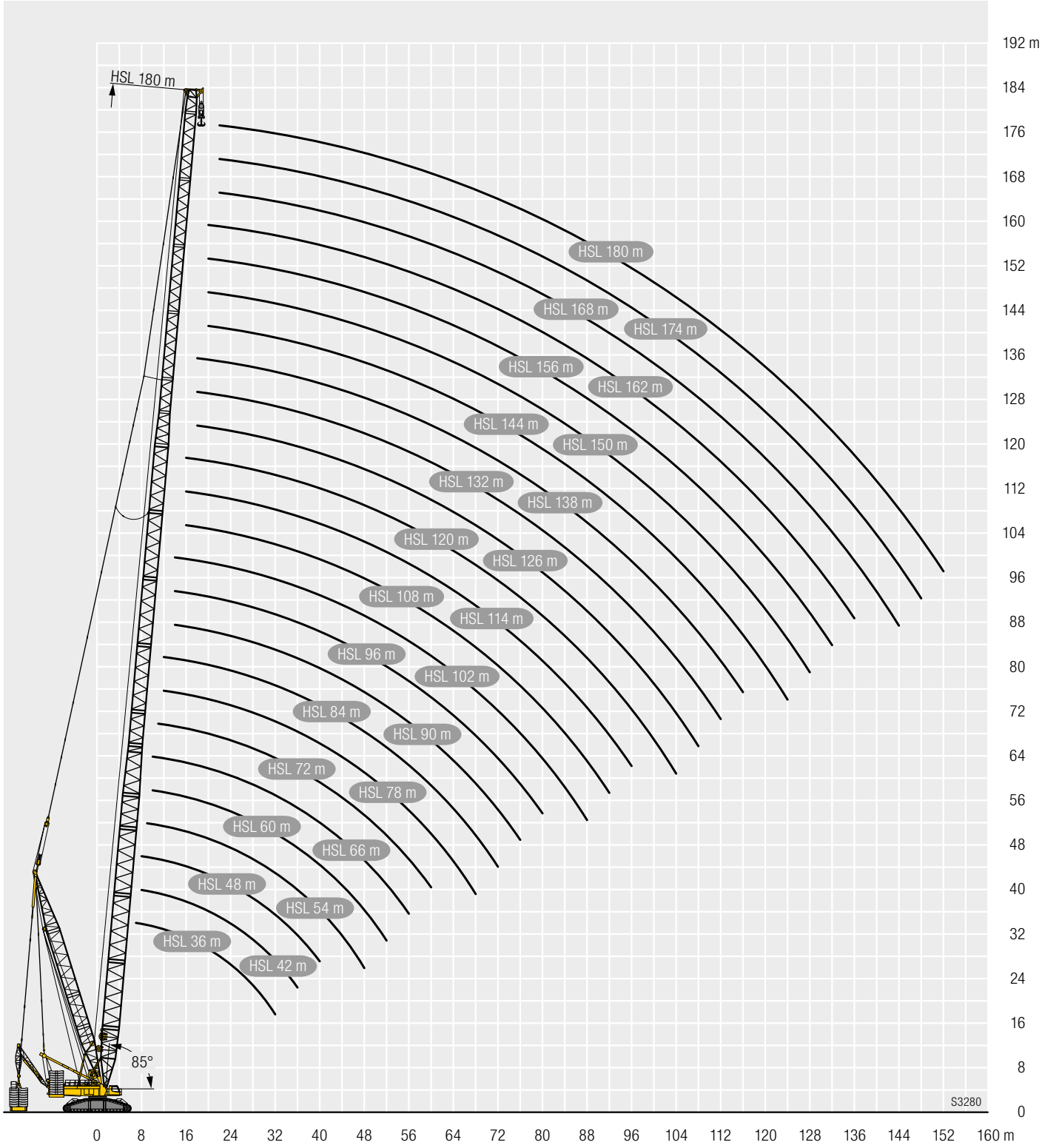

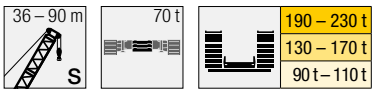

Vorläufig
Preliminary

m	S 36 – 90										m
	36 m	42 m	48 m	54 m	60 m	66 m	72 m	78 m	84 m	90 m	
7	634	642									7
8	573	571	562								8
9	506	504	499	485	461						9
10	450	444	444	429	410	390	228				10
11	402	401	396	384	367	351	336	323			11
12	362	360	361	347	333	319	306	294	281	260	12
14	303	300	300	289	278	267	258	248	239	230	14
16	258	255	255	246	237	229	221	213	206	199	16
18	224	222	220	213	206	199	192	186	179	173	18
20	196	194	193	186	181	175	169	163	158	153	20
22	171	170	169	165	160	155	150	145	140	135	22
24	151	148	148	147	143	138	134	130	125	121	24
26	133	132	131	129	129	124	121	116	112	108	26
28	119	118	117	115	114	112	109	105	101	97,4	28
30	107	106	105	103	103	101	98,7	95,1	91,4	88,1	30
32	97	95,3	94,7	92,9	92,2	90,5	89,2	86,5	82,9	79,8	32
34		86,7	85,9	84,5	83,2	81,6	80,6	78,5	75,5	72,3	34
36		79,1	78	76,6	75,7	73,7	72,8	71,2	68,8	65,9	36
38		72,4	71,6	70,1	69,1	67,2	65,9	64,5	62,6	60	38
40			65,6	63,9	62,9	61,4	59,9	58,3	56,7	54,5	40
44				53,9	52,6	51	49,9	48	46,4	45	44
48				46	44,7	42,9	41,5	40	38,1	36,4	48
52					38	36,2	34,6	32,9	31,3	29,6	52
56						30,5	28,9	27,1	25,3	23,8	56
60							24	22,2	20,3	18,6	60
64								17,9	16	14,3	64
68								14,2	12,3	10,5	68
72									9,1	7,2	72

037_S

Hubhöhen
Lifting heights

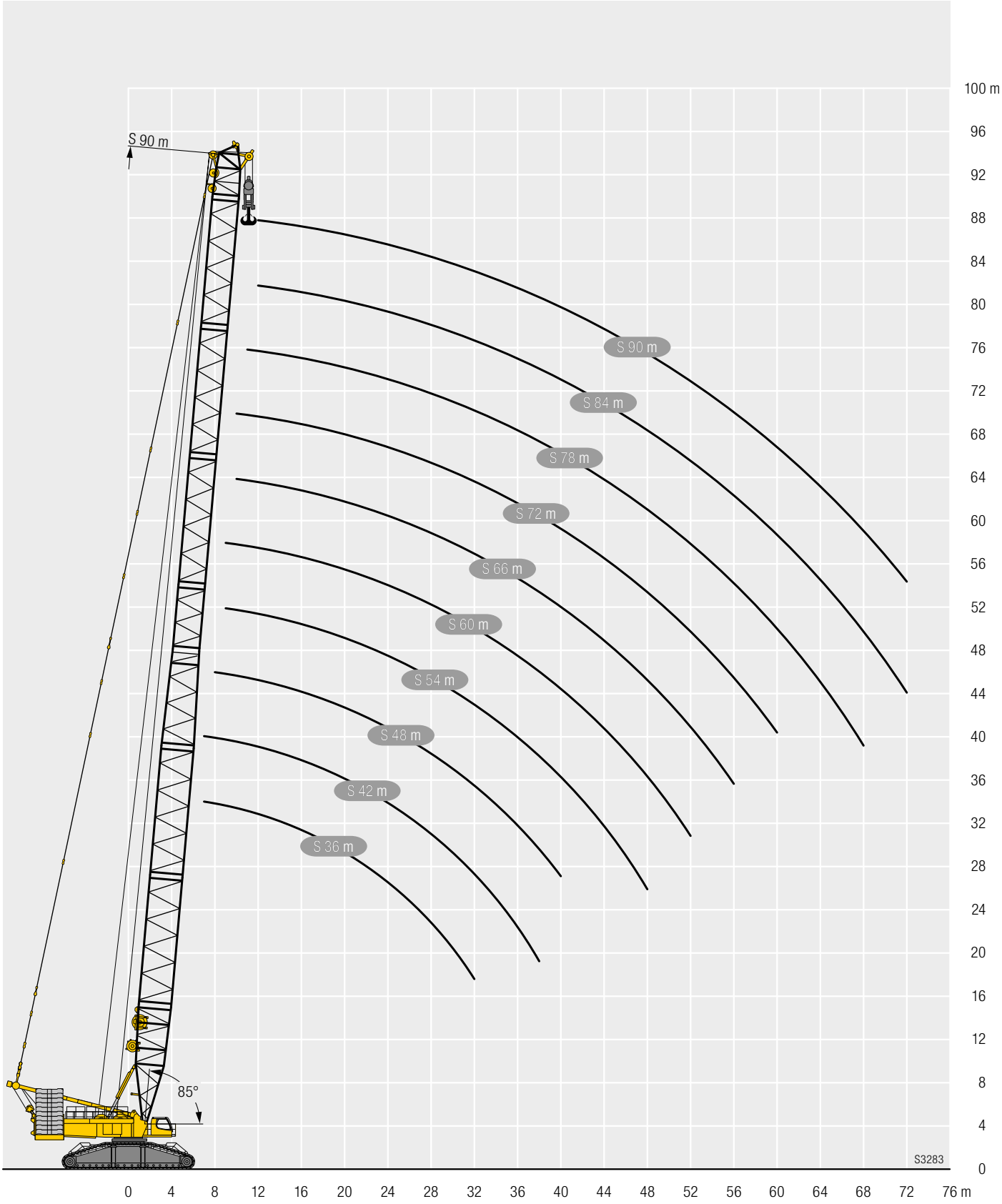

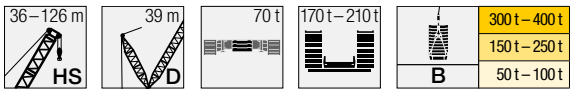

Vorläufig
Preliminary

		HS 36 – 126															
	m	36 m	42 m	48 m	54 m	60 m	66 m	72 m	78 m	84 m	90 m	96 m	102 m	108 m	114 m	120 m	126 m
7	0t	637															
	B	650															
	BV	650															
8	0t	562	559														
	B	650	650														
	BV	650	650														
9	0t	492	489	480	452												
	B	650	650	650	650												
	BV	650	650	650	650												
10	0t	435	433	421	399	388											
	B	650	650	650	650	650											
	BV	650	650	650	650	650											
11	0t	390	387	374	356	347	372	357									
	B	650	650	650	650	650	650	613									
	BV	650	650	650	650	650	650	632									
12	0t	351	349	336	321	313	337	325	313								
	B	650	650	650	650	650	648	609	547								
	BV	650	650	650	650	650	650	628	564								
14	0t	293	289	277	266	260	282	273	263	255	246	238	230				
	B	620	615	611	604	607	604	575	540	484	432	387	346				
	BV	650	650	650	650	645	625	593	557	502	446	398					
16	0t	250	244	235	225	221	240	233	226	219	211	205	199	193	186	180	
	B	545	540	536	531	556	559	538	512	479	429	384	343	307	275	245	
	BV	650	650	648	633	603	582	558	530	497	447	398	354	316	281	250	
18	0t	215	210	202	193	190	208	203	196	190	184	179	174	169	162	157	153
	B	482	480	475	472	510	516	502	482	458	426	382	341	305	273	244	217
	BV	627	618	600	582	557	540	523	502	475	441	398	354	315	281	250	223
20	0t	188	182	176	168	166	182	178	172	167	162	157	153	149	143	139	135
	B	433	429	428	423	464	467	462	451	434	411	379	339	304	271	243	217
	BV	561	560	553	534	515	503	490	473	449	414	383	354	315	280	250	222
22	0t	162	160	155	149	146	161	157	152	148	143	139	135	132	126	123	119
	B	391	389	387	384	421	425	421	415	408	392	370	337	302	270	242	216
	BV	497	509	506	495	476	468	459	446	421	390	361	340	315	280	250	222
24	0t	142	140	138	132	130	143	140	135	132	127	124	121	117	112	109	106
	B	358	354	353	350	385	388	386	381	376	369	353	333	300	267	239	214
	BV	442	465	463	458	444	435	428	419	397	368	341	324	303	279	249	222
26	0t	125	124	123	118	116	128	125	121	118	114	111	108	105	100	97,4	94,4
	B	328	326	323	321	353	357	355	352	348	340	331	318	295	264	235	211
	BV	393	427	426	423	413	406	400	393	376	349	324	309	290	272	249	221
28	0t	111	110	109	106	104	115	113	109	106	102	99,4	96,6	94,1	89,8	87,1	84,3
	B	302	301	298	296	326	330	329	325	322	315	307	301	287	261	231	208
	BV	352	387	394	391	385	379	376	369	359	332	309	296	278	261	246	219
30	0t	100	98,3	97,1	94,7	93,8	104	102	98,4	95,7	92,2	89,5	86,9	84,6	80,5	78	75,4
	B	281	278	277	273	302	305	305	302	299	294	287	281	273	255	226	204
	BV	313	350	365	362	358	353	352	347	341	319	296	284	266	250	237	217
32	0t	90,2	88,1	87,3	85,2	84,8	94,6	92,5	89,1	86,5	83,2	80,7	78,3	76,2	72,2	70	67,4
	B	261	259	257	255	281	284	283	281	279	274	268	263	257	246	222	201
	BV	278	318	338	338	334	330	328	326	321	305	284	273	256	241	229	214
34	0t		79,9	78,7	76,7	76,9	86	84,1	80,9	78,5	75,2	72,9	70,7	68,7	64,8	62,7	60,3
	B		242	240	238	263	265	265	262	261	257	252	246	242	234	218	197
	BV		289	311	316	312	309	308	305	302	292	273	263	247	232	220	207
36	0t		72,5	70,8	69	69,5	78,4	76,7	73,6	71,3	68,3	65,9	63,8	61,9	58,2	56,2	53,9
	B		227	225	223	246	248	248	246	244	241	236	232	227	221	212	193
	BV		260	286	295	293	289	289	286	284	279	263	254	239	225	213	200
38	0t		66	64,6	62,5	62,8	71,5	70	66,9	64,7	61,9	59,8	57,5	55,8	52,2	50,3	48,1
	B		214	212	209	232	233	233	231	229	226	222	219	214	208	202	189
	BV		234	263	275	276	272	272	269	267	264	252	245	231	217	206	194
40	0t			58,9	56,4	56,8	64,9	64	61	58,8	56	54	52,1	50,2	46,7	45	42,8
	B			199	197	218	220	219	217	216	212	209	206	203	197	192	183
	BV			242	255	259	257	256	254	252	249	242	235	223	210	200	188

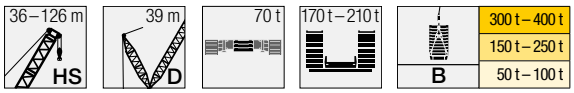

Vorläufig
Preliminary

m		HS 36 – 126															
		36 m	42 m	48 m	54 m	60 m	66 m	72 m	78 m	84 m	90 m	96 m	102 m	108 m	114 m	120 m	126 m
44	0t				46,7	46,5	53,8	53,6	50,8	48,7	46,1	44,2	42,3	40,7	37,4	35,6	33,6
	B				176	195	195	195	193	192	189	186	183	181	176	173	168
	BV				220	231	228	228	226	224	223	220	215	207	197	188	177
48	0t				39,1	38,5	44,6	44,5	42,3	40,3	37,6	35,8	34	32,6	29,4	27,8	25,9
	B				158	176	174	174	172	171	168	166	164	162	158	155	152
	BV				187	207	204	204	203	201	199	197	194	192	185	177	167
52	0t					31,9	37,2	36,9	35,2	33,1	30,6	28,8	27,1	25,7	22,5	21	19,2
	B					159	157	156	155	154	152	149	148	146	142	139	137
	BV					187	185	184	182	181	180	178	176	174	170	166	157
56	0t						31,1	30,6	28,8	27,1	24,5	22,8	21,1	19,7	16,6	15,2	13,4
	B						142	141	139	138	137	135	133	131	128	126	124
	BV						168	167	165	164	163	161	160	157	155	152	147
60	0t							25,4	23,4	21,9	19,3	17,6	15,8	14,5	11,4	10,1	8,3
	B							129	127	125	124	123	121	119	116	114	112
	BV							153	151	149	148	147	145	144	141	139	136
64	0t								18,7	17,4	14,9	13,1	11,3	10	7		
	B								115	114	112	111	110	109	105	104	102
	BV								138	136	135	134	132	131	129	127	125
68	0t								14,9	13,3	10,9	9,1	7,3				
	B								106	104	102	101	100	99,4	96,3	94,5	92,3
	BV								127	125	123	122	121	120	118	117	114
72	0t									9,9	7,6						
	B									95,5	93,5	92,4	91,3	90,6	87,9	86,4	84,2
	BV									115	113	112	111	110	108	107	105
76	0t																
	B										85,7	84,3	83,3	82,7	80,2	78,9	77
	BV										105	103	102	101	99,4	98,6	96,7
80	0t																
	B											77,5	76,2	75,5	73,2	72	70,2
	BV											95,5	93,7	92,8	91,3	90,5	88,9
84	0t																
	B												70	69	66,7	65,8	64,1
	BV												86,6	85,4	83,9	83,2	81,8
88	0t																
	B												64,2	63,2	61	60,1	58,5
	BV												80	78,9	77,3	76,4	75,2
92	0t																
	B													57,9	55,7	54,7	53,3
	BV													72,9	71,2	70,4	69
96	0t																
	B														50,9	49,9	48,5
	BV														65,8	64,9	63,4
100	0t																
	B															45,5	44
	BV															59,9	58,2
104	0t																
	B															41,5	39,8
	BV															55,3	53,7
108	0t																
	B																36
	BV																49,3

002_HSDB_030_HSDBV

Hubhöhen
Lifting heights

HSDB/HSDBV

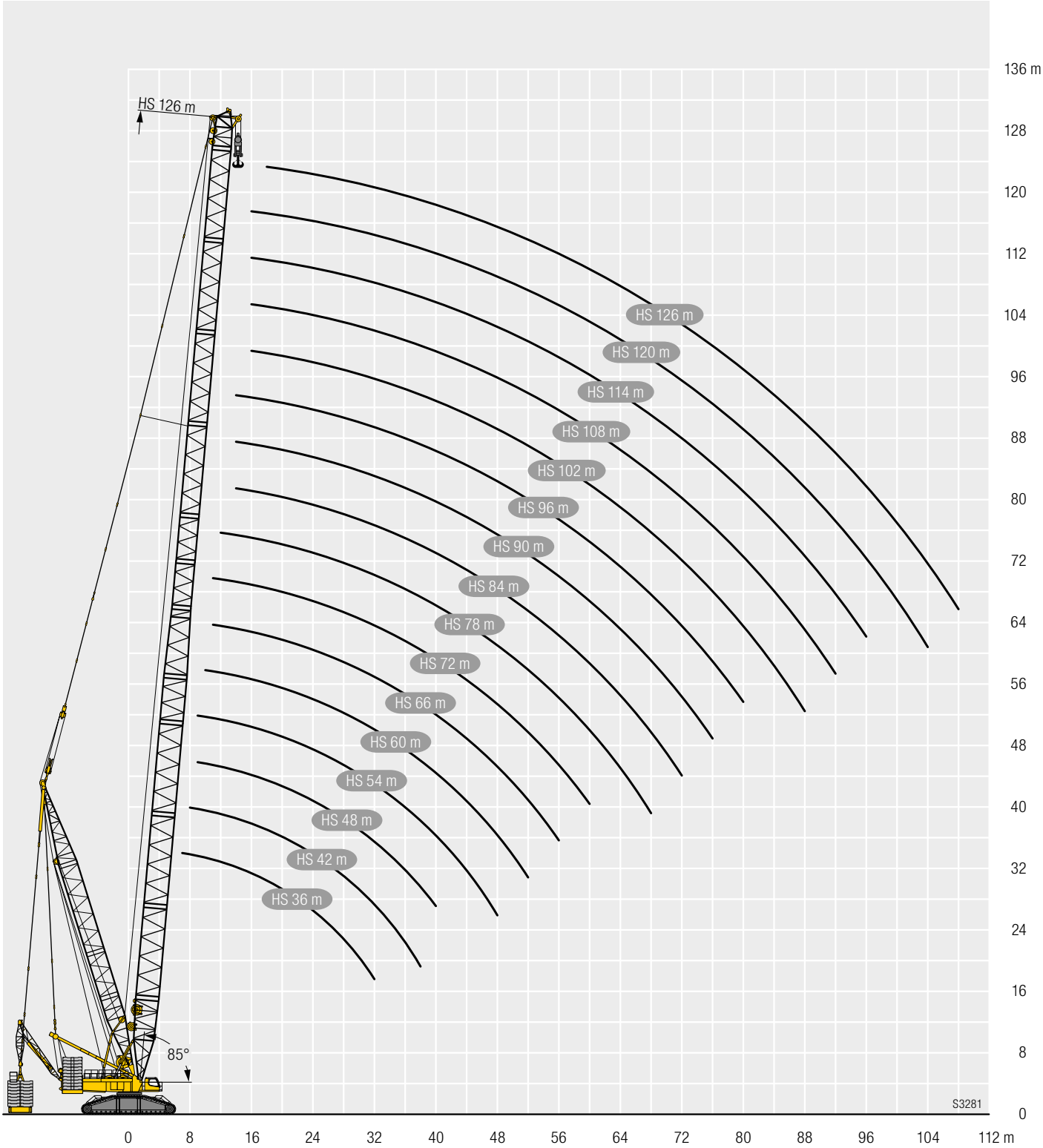

Traglasten
Lifting capacities

HSDWB

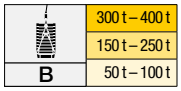

Vorläufig
Preliminary

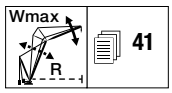

m		HS 42																					
		W 18		W 24		W 30		W 36		W 48		W 60		W 72		W 84		W 90		W 96		W 102	
		87*/85	WVmax	87*/85	WVmax	87*/85	WVmax	87*/85	WVmax	87*/85	WVmax	87*/85	WVmax	87*/85	WVmax	87*/85	WVmax	87*/85	WVmax	87*/85	WVmax	87*/85	WVmax
11	-	409,0*	409,0*																				
	B	450,0*	450,0*																				
12	-	373,0*	373,0*	357,0*	357,0*																		
	B	450,0*	450,0[1]	450,0*	450,0*																		
14	-	318,0*	318,0*	305,0*	305,0*	295,0*	295,0*																
	B	450,0	450,0[2]	450,0	450,0[1]	450,0*	450,0*																
16	-	276,0*	276,0*	266,0*	266,0*	257,0*	257,0*	248,0*	248,0*														
	B	450,0	450,0[4]	450,0	450,0[2]	450,0	450,0[1]	429,0*	429,0*														
18	-	244,0*	244,0*	235,0*	235,0*	228,0*	228,0*	220,0*	220,0*	206,0*	206,0*												
	B	428,0	449,0[2]	445,0	445,0	450,0	450,0[2]	435,0	435,0	335,0*	335,0*												
20	-	219,0*	219,0*	210,0*	210,0*	204,0*	204,0*	197,0*	197,0*	185,0*	185,0*												
	B	365,0	433,0[2]	385,0	430,0[1]	428,0	428,0	417,0	417,0	329,0*	336,0[1]												
22	-	198,0*	198,0*	190,0*	190,0*	184,0*	184,0*	178,0*	178,0*	167,0*	167,0*	159,0*	159,0*										
	B	316,0	398,0[3]	334,0	395,0[1]	391,0	395,0[3]	386,0	388,0[2]	336,0	336,0	257,0*	257,0*										
24	-		175,0[11]	174,0*	174,0*	168,0*	168,0*	162,0*	162,0*	152,0*	152,0*	145,0*	145,0*	139,0*	139,0*								
	B		365,0[5]	294,0	362,0[2]	351,0	363,0[3]	346,0	359,0[2]	325,0	325,0	260,0	260,0	193,0*	193,0*								
26	-		155,0[11]	160,0*	160,0*	154,0*	154,0*	148,0*	148,0*	140,0*	140,0*	133,0*	133,0*	128,0*	129,0[1]								
	B		335,0[5]	261,0	334,0[3]	313,0	333,0[4]	310,0	330,0[2]	302,0	311,0[1]	258,0	258,0	190,0*	191,0[1]	145,0*	145,0*						
28	-		138,0[11]	148,0*	148,0*	142,0*	142,0*	137,0*	137,0*	129,0*	129,0*	123,0*	123,0*	118,0*	120,0[1]	112,0*	112,0*	109,0*	109,0*				
	B		307,0[6]	234,0	308,0[4]	283,0	308,0[4]	280,0	305,0[3]	273,0	299,0[1]	253,0	253,0	191,0	191,0[1]	143,0*	143,0*	124,0*	124,0*				
30	-		124,0[11]		132,0[11]	132,0*	132,0*	127,0*	127,0*	119,0*	119,0*	114,0*	114,0*	109,0*	110,0[1]	104,0*	105,0[1]	101,0*	101,0*	99,2*	99,2*		
	B		286,0[8]		284,0[4]	257,0	286,0[4]	255,0	283,0[2]	249,0	287,0[1]	243,0	244,0[2]	188,0	188,0	140,0*	142,0[1]	122,0*	122,0*	104,0*	104,0*		
32	-		110,0[10]		119,0[11]	123,0*	123,0*	118,0*	118,0*	110,0*	110,0*	106,0*	106,0*	101,0*	101,0[1]	96,5*	97,6[1]	93,4*	96,1[1]	92,0*	92,0*	88,1*	88,1*
	B		267,0[10]		265,0[5]	235,0	267,0[5]	233,0	265,0[3]	229,0	276,0[1]	223,0	233,0[2]	186,0	186,0	140,0	140,0[1]	119,0*	121,0[1]	103,0*	103,0[1]	88,2*	88,2*
34	-		97,7[9]		107,0[11]	115,0*	115,0*	110,0*	110,0*	103,0*	103,0*	98,3*	98,3*	94,5*	94,5*	89,9*	90,1[1]	86,9*	90,6[1]	85,6*	85,6*	82,7*	82,7*
	B		247,0[9]		249,0[6]	210,0	250,0[6]	214,0	248,0[4]	211,0	264,0[1]	206,0	223,0[2]	182,0	182,0[2]	139,0	139,0	119,0	119,0[1]	102,0	102,0[1]	87,0*	87,4[1]
36	-		87,7[9]		95,8[11]		102,0[11]	103,0*	103,0*	96,2*	96,2*	91,9*	91,9*	88,2*	88,2*	84,0*	84,0*	81,1*	85,1[1]	79,9*	79,9*	77,1*	77,1*
	B		231,0[9]		234,0[7]		235,0[7]	198,0	233,0[5]	195,0	253,0[1]	191,0	213,0[2]	178,0	179,0[2]	138,0	138,0	118,0	118,0	101,0	101,0[1]	86,8	86,8
38	-		78,0[8]		86,1[11]		91,9[11]	97,6*	97,6*	90,2*	90,2*	86,0*	86,0*	82,6*	82,6*	78,5*	78,5*	75,9*	79,6[1]	74,7*	74,7*	72,0*	72,0*
	B		215,0[8]		219,0[8]		220,0[8]	184,0	219,0[5]	181,0	241,0[1]	178,0	203,0[2]	172,0	175,0[2]	136,0	136,0[2]	116,0	116,0	100,0	100,0	85,8	85,8
40	-		70,2[8]		77,2[10]		83,0[11]	92,0*	92,0*	84,8*	84,8*	80,8*	80,8*	77,5*	77,5*	73,5*	73,5*	70,9*	74,1[1]	70,0*	70,0*	67,3*	67,3*
	B		202,0[8]		206,0[9]		207,0[8]	164,0	205,0[5]	169,0	230,0[1]	166,0	194,0[2]	164,0	171,0[2]	135,0	135,0[2]	114,0	114,0[2]	99,3	99,3	84,9	84,9
44	-		55,9[6]		62,0[9]		67,2[11]		73,1[11]	75,5*	75,5*	71,6*	71,6*	68,5*	68,5*	64,9*	64,9*	62,5*	63,1[1]	61,6*	61,6*	59,1*	59,1*
	B		177,0[6]		182,0[9]		186,0[11]		184,0[7]	148,0	206,0[1]	146,0	177,0[2]	144,0	162,0[2]	132,0	133,0[2]	111,0	112,0[2]	97,2	97,3[2]	83,1	83,1
48	-		44,8[5]		50,1[8]		54,0[10]		59,9[11]	68,0*	68,0*	64,0*	64,0*	61,0*	61,0*	57,6*	57,6*	55,2*	55,2*	54,4*	54,4*	52,1*	52,1*
	B		157,0[5]		162,0[8]		164,0[10]		167,0[9]	131,0	183,0[1]	130,0	161,0[2]	128,0	151,0[2]	123,0	130,0[2]	108,0	110,0[2]	95,3	95,9[2]	81,3	81,5[2]
52	-				40,2[7]		42,9[9]		48,2[10]	61,0*	61,0*	57,5*	57,5*	54,6*	54,6*	51,3*	51,3*	49,1*	49,1*	48,4*	48,4*	46,1*	46,1*
	B				144,0[7]		146,0[9]		150,0[10]	108,0	160,0[1]	116,0	145,0[2]	114,0	140,0[2]	111,0	125,0[2]	104,0	108,0[2]	93,6	94,5[2]	79,6	80,2[2]
56	-						33,1[7]		38,1[9]		47,3[11]	52,1*	52,1*	49,1*	49,1*	45,9*	45,9*	43,7*	43,7*	43,1*	43,1*	40,9*	40,9*
	B						130,0[7]		134,0[9]		137,0[1]	105,0	132,0[3]	103,0	129,0[2]	100,0	117,0[2]	96,9	104,0[2]	91,0	92,9[2]	78,0	78,9[2]
60	-						25,3[6]		29,6[8]		38,4[11]	46,9*	46,9*	44,4*	44,4*	41,2*	41,2*	39,1*	39,1*	38,4*	38,4*	36,3*	36,3*
	B						116,0[6]		120,0[8]		124,0[7]	94,8	121,0[4]	93,3	119,0[2]	90,9	110,0[2]	88,7	101,0[2]	87,2	90,7[2]	76,4	77,2[2]
64	-								22,5[7]		30,7[11]	42,5*	42,5*	40,2*	40,2*	37,1*	37,1*	35,0*	35,0*	34,3*	34,3*	32,3*	32,3*
	B								107,0[7]		114,0[10]	72,7	111,0[5]	84,9	109,0[2]	82,7	104,0[2]	80,5	96,7[2]	80,2	88,5[2]	74,3	76,1[3]
68	-										23,3[10]		31,5[11]	36,2*	36,2*	33,4*	33,4*	31,3*	31,3*	30,7*	30,7*	28,7*	28,7*
	B										103,0[10]		102,0[5]	77,6	101,0[3]	75,5	96,9[2]	73,3	91,3[2]	73,2	85,4[2]	70,3	74,1[3]
72	-										17,0[9]		25,4[11]	32,3*	32,3*	30,2*	30,2*	28,1*	28,1*	27,4*	27,4*	25,5*	25,5*
	B										92,1[9]		93,9[6]	68,4	92,0[3]	69,1	89,9[2]	67,2	85,9[2]	67,1	81,8[2]	65,1	71,8[3]
76	-										11,7[8]		19,7[11]	29,4*	29,4*	27,3*	27,3*	25,2*	25,2*	24,6*	24,6*	22,6*	22,6*
	B										82,4[8]		86,8[7]	54,2	85,1[4]	63,3	82,8[2]	61,4	80,3[2]	61,4	78,1[2]	59,5	69,5[2]
80	-												14,5[10]		20,8[11]	24,4*	24,4*	22,7*	22,7*	22,0*	22,0*	20,0*	20,0*
	B												80,7[9]		78,9[5]	58,2	76,3[3]	56,5	74,7[2]	56,2	73,6[2]	54,6	67,3[2]
84	-												9,1[6]		16,2[11]	21,6*	21,6*	20,2*	20,2*	19,6*	19,6*	17,6*	17,6*
	B												72,9[9]		73,8[6]	51,3	71,0[3]	52,2	69,0[2]	51,9	69,1[2]	50,1	64,4[2]
88	-														12,0[11]	19,5*	19,5*	18,0*	18,0*	17,5*	17,5*	15,5*	15,5*
	B												65,2[8]		68,8[7]	40,1	66,5[4]	47,0	64,4[3]	47,8	64,0[2]	46,1	61,5[2]
92	-																12,4[11]	16,3*	16,3*	15,6*	15,6*	13,6*	13,6*
	B														63,6[9]		61,5[5]	39,4	59,4[4]	43,6	59,2[3]	42,5	57,5[2]
96	-																		9,8[11]	14,0*	14,0*	11,9*	11,9*
	B														58,2[9]		56,8[6]		55,1[4]	38,4	54,7[3]	38,9	52,8[2]
100	-																		6,2[11]	12,7*	12,7*	10,4*	10,4*
	B														51,9[8]		52,8[6]		51,1[5]	29,1	50,8[4]	34,9	49,1[3]
104	-																					9,1*	9,1*
	B																49,4[7]		47,6[6]		47,2[4]	28,5	45,5[3]
108	-																						
	B																46,3[9]		44,5[7]		44,1[5]		42,4[4]
112	-																						
	B																40,9[8]		42,1[8]		41,2[6]		39,4[5]
116	-																						
	B																		37,8[8]		38,4[7]		36,7[5]
120	-																						
	B																		33,1[7]		35,2[9]		33,9[6]
124	-																						
	B																				31,6[8]		31,3[7]
128	-																						
	B																						28,9[8]
132	-																						
	B																						24,8[7]

1) 12°; 2) 17°; 3) 22°; 4) 27°; 5) 32°; 6) 37°; 7) 42°; 8) 47°; 9) 52°; 10) 57°; 11) 62°

Traglasten
Lifting capacities

HSDWB

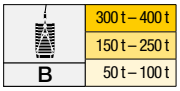

41

m		HS 48																					
		W 18		W 24		W 30		W 36		W 48		W 60		W 72		W 84		W 90		W 96		W 102	
		87°/85	WVmax	87°/85	WVmax	87°/85	WVmax	87°/85	WVmax	87°/85	WVmax	87°/85	WVmax	87°/85	WVmax	87°/85	WVmax	87°/85	WVmax	87°/85	WVmax	87°/85	WVmax
11	-	389,0*	389,0*																				
	B	450,0*	450,0*																				
12	-	357,0*	357,0*	341,0*	341,0*																		
	B	450,0*	450,0[1]	450,0*	450,0*																		
14	-	305,0*	305,0*	292,0*	292,0*	283,0*	283,0*																
	B	450,0	450,0[2]	450,0*	450,0[1]	450,0*	450,0*																
16	-	266,0*	266,0*	256,0*	256,0*	248,0*	248,0*	240,0*	240,0*														
	B	450,0	450,0[1]	450,0	450,0[2]	448,0*	450,0[1]	401,0*	401,0*														
18	-	236,0*	236,0*	227,0*	227,0*	220,0*	220,0*	213,0*	213,0*	199,0*	199,0*												
	B	443,0	450,0[1]	450,0	450,0	450,0	450,0	408,0	408,0	314,0*	314,0*												
20	-	212,0*	212,0*	203,0*	203,0*	197,0*	197,0*	191,0*	191,0*	179,0*	179,0*												
	B	378,0	428,0[1]	403,0	420,0[3]	419,0	421,0[2]	399,0	399,0	308,0*	313,0[1]												
22	-	193,0*	193,0*	184,0*	184,0*	178,0*	178,0*	173,0*	173,0*	162,0*	162,0*	154,0*	154,0*										
	B	327,0	394,0[2]	348,0	389,0[1]	385,0	389,0[2]	378,0	379,0[2]	315,0	315,0	242,0*	242,0*										
24	-	171,0	171,0	168,0*	168,0*	162,0*	162,0*	158,0*	158,0*	148,0*	148,0*	141,0*	141,0*	135,0*	135,0*								
	B	283,0	361,0[4]	306,0	358,0[2]	356,0	358,0[3]	350,0	352,0[2]	310,0	310,0	238,0*	243,0[1]	184,0*	184,0*								
26	-		152,0[11]	155,0*	155,0*	149,0*	149,0*	145,0*	145,0*	135,0*	135,0*	129,0*	129,0*	124,0*	124,0*								
	B		333,0[6]	271,0	330,0[3]	330,0	331,0[4]	325,0	327,0[3]	302,0	302,0[2]	243,0	243,0	182,0*	183,0[1]								
28	-		135,0[11]	144,0*	144,0*	137,0*	137,0*	133,0*	133,0*	125,0*	125,0*	119,0*	119,0*	114,0*	114,0*	109,0*	109,0*						
	B		308,0[7]	242,0	306,0[4]	303,0	308,0[5]	301,0	304,0[4]	288,0	288,0	240,0	240,0	183,0	183,0	137,0*	137,0*	119,0*	119,0*				
30	-		121,0[11]	130,0	130,0	128,0*	128,0*	124,0*	124,0*	115,0*	115,0*	110,0*	110,0*	106,0*	106,0*	101,0*	102,0[1]	99,1*	99,1*	96,2*	96,2*		
	B		284,0[7]	207,0	285,0[5]	275,0	286,0[6]	273,0	284,0[4]	266,0	271,0[1]	235,0	235,0	181,0	181,0	135,0*	136,0[1]	117,0*	117,0*	101,0*	101,0*		
32	-		108,0[10]		116,0[11]	119,0*	119,0*	115,0*	115,0*	107,0*	107,0*	102,0*	102,0*	98,5*	98,5*	93,6*	94,6[1]	92,1*	94,3[1]	89,3*	89,3*	84,8*	84,8*
	B		264,0[9]		264,0[5]	251,0	266,0[6]	250,0	265,0[4]	244,0	258,0[1]	229,0	229,0	178,0	178,0	135,0	135,0[1]	115,0*	116,0[1]	99,2*	99,2*	85,2*	85,2*
34	-		97,0[10]		104,0[11]	112,0*	112,0*	108,0*	108,0*	99,8*	99,8*	95,4*	95,4*	91,7*	91,7*	87,2*	87,4[1]	85,7*	89,0[1]	83,1*	83,1*	80,2*	80,2*
	B		247,0[10]		246,0[6]	229,0	248,0[6]	230,0	247,0[5]	224,0	244,0[1]	219,0	221,0[2]	176,0	176,0	134,0	134,0	115,0	115,0[1]	97,9*	98,8[1]	84,1*	84,4[1]
36	-		86,6[9]		94,5[11]	101,0	101,0	101,0*	101,0*	93,3*	93,3*	89,1*	89,1*	85,6*	85,6*	81,5*	81,5*	80,0*	83,7[1]	77,5*	77,5*	74,7*	74,7*
	B		229,0[9]		231,0[7]	186,0	233,0[7]	213,0	232,0[5]	208,0	230,0[1]	204,0	214,0[2]	174,0	174,0[2]	132,0	132,0	113,0	113,0	98,1	98,1[1]	84,1	84,1
38	-		77,9[9]		85,2[11]		89,8[11]	95,3*	95,3*	87,4*	87,4*	83,5*	83,5*	80,1*	80,1*	76,2*	76,2*	74,9*	78,4[1]	72,4*	72,4*	69,7*	69,7*
	B		214,0[9]		218,0[9]		221,0[9]	197,0	219,0[6]	193,0	217,0[1]	189,0	207,0[2]	172,0	173,0[2]	131,0	131,0	112,0	112,0	97,2	97,2	83,1	83,1[1]
40	-		69,3[8]		77,0[11]		80,9[11]	90,5*	90,5*	82,2*	82,2*	78,4*	78,4*	75,2*	75,2*	71,4*	71,4*	70,1*	73,1[1]	67,9*	67,9*	65,2*	65,2*
	B		200,0[8]		206,0[11]		208,0[10]	181,0	207,0[7]	180,0	203,0[1]	177,0	199,0[2]	167,0	172,0[2]	130,0	130,0[2]	110,0	110,0	96,2	96,2	82,3	82,3[1]
44	-		55,2[7]		62,0[10]		66,2[11]		72,2[11]	73,2*	73,2*	69,4*	69,4*	66,5*	66,5*	63,0*	63,0*	61,9*	62,5[1]	59,7*	59,7*	57,2*	57,2*
	B		176,0[7]		182,0[10]		184,0[11]		186,0[9]	158,0	181,0[4]	156,0	179,0[2]	153,0	170,0[2]	128,0	129,0[2]	107,0	108,0[2]	94,3	94,3[2]	80,6	80,7[1]
48	-		43,8[6]		49,6[9]		53,1[10]		59,6[11]	65,8*	65,8*	62,0*	62,0*	59,2*	59,2*	55,8*	55,8*	54,8*	54,8*	52,7*	52,7*	50,4*	50,4*
	B		156,0[6]		161,0[9]		163,0[10]		167,0[10]	140,0	163,0[5]	138,0	161,0[3]	136,0	157,0[2]	125,0	128,0[2]	104,0	106,0[2]	92,5	93,1[2]	79,0	79,2[2]
52	-		34,6[5]		39,5[8]		42,0[9]		48,6[11]	60,2*	60,2*	55,7*	55,7*	52,9*	52,9*	49,7*	49,7*	48,8*	48,8*	46,8*	46,8*	44,6*	44,6*
	B		139,0[5]		143,0[8]		145,0[9]		150,0[11]	122,0	146,0[6]	124,0	144,0[3]	122,0	143,0[2]	117,0	125,0[2]	101,0	104,0[2]	90,8	91,9[2]	77,4	78,0[2]
56	-				30,9[7]		32,4[8]		38,3[10]		46,4[11]	50,4*	50,4*	47,6*	47,6*	44,4*	44,4*	43,5*	43,5*	41,6*	41,6*	39,5*	39,5*
	B				128,0[7]		129,0[8]		134,0[10]		133,0[7]	112,0	131,0[3]	110,0	130,0[2]	107,0	120,0[2]	98,0	102,0[2]	89,1	90,6[2]	75,9	76,8[2]
60	-						24,5[7]		29,5[9]		37,7[11]	45,9*	45,9*	42,9*	42,9*	39,8*	39,8*	38,9*	38,9*	37,1*	37,1*	34,9*	34,9*
	B						115,0[7]		120,0[9]		123,0[9]	104,0	120,0[5]	99,6	119,0[3]	97,1	115,0[2]	93,6	99,8[3]	87,2	89,2[3]	74,4	75,5[2]
64	-						17,8[6]		22,3[8]		29,9[11]	41,9*	41,9*	38,9*	38,9*	35,8*	35,8*	34,8*	34,8*	33,1*	33,1*	31,0*	31,0*
	B						103,0[6]		107,0[8]		113,0[11]	81,9	111,0[6]	90,7	109,0[3]	88,4	107,0[2]	87,6	97,2[2]	83,7	87,9[3]	72,9	74,3[3]
68	-								15,9[7]		23,0[11]		30,8[11]	35,3*	35,3*	32,2*	32,2*	31,2*	31,2*	29,5*	29,5*	27,5*	27,5*
	B								95,8[7]		103,0[11]		103,0[7]	83,0	101,0[4]	80,7	98,3[3]	80,1	93,3[3]	78,4	85,5[3]	71,3	73,1[3]
72	-										16,4[10]		24,7[11]	31,9*	31,9*	29,0*	29,0*	28,1*	28,1*	26,4*	26,4*	24,4*	24,4*
	B										91,8[10]		94,9[10]	74,8	93,2[5]	74,0	90,9[3]	73,3	88,9[3]	71,9	83,1[3]	68,3	71,6[3]
76	-										10,5[9]		19,0[11]	28,9*	28,9*	26,2*	26,2*	25,2*	25,2*	23,5*	23,5*	21,5*	21,5*
	B										82,0[9]		88,6[10]	61,3	86,1[5]	68,0	83,6[3]	67,3	82,9[3]	65,9	79,5[2]	64,0	70,2[3]
80	-												13,7[11]		20,0[11]	23,8*	23,8*	22,6*	22,6*	21,0*	21,0*	19,0*	19,0*
	B										73,2[8]		80,8[10]		80,2[6]	62,7	77,8[4]	61,8	77,0[3]	60,7	74,9[2]	58,8	68,2[3]
84	-												8,2[10]		15,3[11]	21,2*	21,2*	20,3*	20,3*	18,7*	18,7*	16,7*	16,7*
	B												72,8[10]		74,7[7]	57,0	72,2[5]	57,2	71,6[4]	56,1	70,3[3]	54,3	65,9[3]
88	-														10,8[11]	19,1*	19,1*	18,2*	18,2*	16,6*	16,6*	14,6*	14,6*
	B												64,9[9]		70,2[9]	46,2	67,2[5]	52,6	66,4[4]	51,9	65,3[4]	50,0	63,7[3]
92	-																11,3[11]	16,4*	16,4*	14,7*	14,7*	12,7*	12,7*
	B												58,0[8]		64,6[10]		62,9[6]	46,3	62,3[5]	47,8	60,9[4]	46,2	58,7[3]
96	-																7,3[11]	13,5	13,5	13,1*	13,1*	11,1*	11,1*
	B														58,2[10]		58,4[7]	32,3	57,9[6]	43,6	56,5[5]	42,6	54,7[4]
100	-																			11,9*	11,9*	9,6*	9,6*
	B														51,8[8]		54,3[9]		53,5[7]	34,4	52,3[6]	39,0	50,7[5]
104	-																					8,3*	8,3*
	B														45,9[8]		50,9[10]		49,6[6]		48,5[6]	33,2	46,9[5]
108	-																					5,8	5,8
	B																46,2[10]		46,7[10]		45,0[7]	22,5	43,5[6]
112	-																						
	B																40,7[9]		43,4[10]		41,9[8]		40,3[6]
116	-																						
	B																35,7[8]		38,2[9]		39,4[9]		37,7[7]
120	-																						
	B																		33,4[8]		36,2[10]		35,4[8]
124	-																						
	B																		28,8[7]		31,4[9]		33,5[10]
128	-																						
	B																				27,0[8]		28,8[9]
132	-																						
	B																						24,5[8]
136	-																						
	B																						20,7[7]

1) 12°; 2) 17°; 3) 22°; 4) 27°; 5) 32°; 6) 37°; 7) 42°; 8) 47°; 9) 52°; 10) 57°; 11) 62°

Traglasten
Lifting capacities

HSDWB

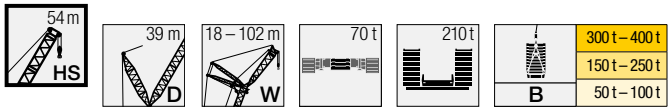

Vorläufig
Preliminary

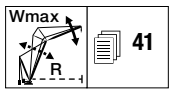

m		HS 54																					
		W 18		W 24		W 30		W 36		W 48		W 60		W 72		W 84		W 90		W 96		W 102	
		87*/85	WVmax	87*/85	WVmax	87*/85	WVmax	87*/85	WVmax	87*/85	WVmax	87*/85	WVmax	87*/85	WVmax	87*/85	WVmax	87*/85	WVmax	87*/85	WVmax	87*/85	WVmax
11	-	371,0*	371,0*																				
	B	450,0*	450,0*																				
12	-	341,0*	341,0*																				
	B	450,0*	450,0*																				
14	-	292,0*	292,0*	281,0*	281,0*	272,0*	272,0*																
	B	450,0	450,0[2]	450,0*	450,0[1]	427,0*	427,0*																
16	-	256,0*	256,0*	246,0*	246,0*	238,0*	238,0*	232,0*	232,0*														
	B	450,0	450,0[3]	450,0	450,0[2]	411,0*	427,0[1]	373,0*	373,0*														
18	-	227,0*	227,0*	219,0*	219,0*	212,0*	212,0*	206,0*	206,0*														
	B	450,0	450,0	446,0	446,0	423,0	423,0	362,0*	376,0[1]	293,0*	293,0*												
20	-	204,0*	204,0*	196,0*	196,0*	190,0*	190,0*	185,0*	185,0*	174,0*	174,0*												
	B	394,0	423,0[1]	414,0	417,0[3]	402,0	402,0[2]	373,0	373,0	288,0*	291,0[1]												
22	-	186,0*	186,0*	178,0*	178,0*	172,0*	172,0*	168,0*	168,0*	158,0*	158,0*	150,0*	150,0*										
	B	338,0	389,0[1]	367,0	386,0[3]	375,0	375,0[3]	359,0	359,0[2]	294,0	294,0	227,0*	227,0*										
24	-	164,0	164,0[11]	163,0*	163,0*	157,0*	157,0*	154,0*	154,0*	144,0*	144,0*	138,0*	138,0*	131,0*	131,0*								
	B	296,0	356,0[3]	321,0	354,0[3]	348,0	350,0[3]	340,0	340,0	289,0	289,0	223,0*	227,0[1]	176,0*	176,0*								
26	-		148,0[11]	150,0*	150,0*	144,0*	144,0*	141,0*	141,0*	132,0*	132,0*	126,0*	126,0*	120,0*	120,0*								
	B		329,0[4]	285,0	326,0[4]	323,0	325,0[4]	318,0	319,0[3]	284,0	284,0	228,0	228,0[1]	173,0*	173,0*								
28	-		131,0[11]	139,0*	139,0*	133,0*	133,0*	130,0*	130,0*	122,0*	122,0*	117,0*	117,0*	111,0*	112,0[1]	106,0*	106,0*						
	B		305,0[7]	252,0	302,0[3]	302,0	303,0[5]	298,0	299,0[3]	278,0	278,0	225,0	225,0	171,0*	173,0[1]	131,0*	131,0*	114,0*	114,0*				
30	-		117,0[11]	125,0	125,0	124,0*	124,0*	121,0*	121,0*	113,0*	113,0*	108,0*	108,0*	103,0*	103,0[1]	97,7*	98,4[1]	96,0*	96,0*	93,1*	93,1*		
	B		284,0[9]	216,0	282,0[5]	281,0	283,0[6]	278,0	280,0[4]	267,0	267,0	221,0	221,0	172,0	172,0[1]	129,0*	130,0[1]	112,0*	112,0*	96,5*	96,5*		
32	-		105,0[11]		113,0[11]	115,0*	115,0*	112,0*	112,0*	105,0*	105,0*	100,0*	100,0*	95,5*	95,5*	90,8*	91,5[1]	89,2*	91,1[1]	86,5*	86,5*	81,5*	81,5*
	B		263,0[9]		264,0[7]	259,0	264,0[7]	259,0	263,0[5]	251,0	253,0[3]	218,0	218,0	170,0	170,0	129,0	129,0[1]	110,0*	111,0[1]	95,3*	95,3*	82,0*	82,0*
34	-		93,0[10]		101,0[11]	108,0*	108,0*	105,0*	105,0*	97,7*	97,7*	93,6*	93,6*	88,9*	88,9*	84,5*	84,6[1]	83,1*	86,0[1]	80,5*	80,5*	77,6*	77,6*
	B		244,0[10]		247,0[7]	236,0	247,0[7]	238,0	246,0[5]	233,0	239,0[3]	213,0	213,0	168,0	168,0	128,0	128,0	110,0	110,0[1]	94,1*	95,0[1]	81,0*	81,2[1]
36	-		84,3[10]		91,3[11]	97,3	97,3	98,6*	98,6*	91,3*	91,3*	87,5*	87,5*	83,0*	83,0*	78,9*	78,9*	77,6*	80,9[1]	75,0*	75,0*	72,3*	72,3*
	B		228,0[10]		231,0[8]	203,0	232,0[8]	219,0	231,0[6]	215,0	225,0[3]	206,0	206,0[3]	166,0	166,0[2]	127,0	127,0	109,0	109,0	94,5	94,5	80,1*	80,7[1]
38	-		74,8[9]		82,7[11]		87,1[11]	93,0*	93,0*	85,6*	85,6*	82,0*	82,0*	77,6*	77,6*	73,7*	73,7*	72,6*	75,8[1]	70,1*	70,1*	67,4*	67,4*
	B		212,0[9]		215,0[8]		218,0[9]	203,0	217,0[6]	200,0	212,0[4]	195,0	201,0[2]	164,0	166,0[2]	126,0	126,0	108,0	108,0	93,6	93,6	80,3	80,3
40	-		67,5[9]		74,1[11]		78,3[11]	88,2*	88,2*	80,5*	80,5*	77,0*	77,0*	72,8*	72,8*	69,1*	69,1*	67,9*	70,6[1]	65,7*	65,7*	63,0*	63,0*
	B		199,0[9]		204,0[11]		206,0[10]	188,0	205,0[7]	186,0	200,0[4]	183,0	195,0[2]	162,0	165,0[2]	125,0	125,0[2]	106,0	106,0	92,8	92,8	79,5	79,5
44	-		53,9[8]		59,9[10]		63,8[11]		70,7[11]	71,7*	71,7*	68,3*	68,3*	64,4*	64,4*	61,0*	61,0*	59,9*	60,4[1]	57,8*	57,8*	55,3*	55,3*
	B		174,0[8]		180,0[10]		183,0[11]		185,0[8]	163,0	180,0[4]	160,0	177,0[3]	156,0	164,0[2]	123,0	124,0[2]	103,0	104,0[2]	91,0	91,0	78,0	78,0
48	-		42,7[7]		48,5[10]		51,4[11]		57,9[11]	64,4*	64,4*	61,0*	61,0*	57,3*	57,3*	54,0*	54,0*	53,0*	53,0*	51,0*	51,0*	48,6*	48,6*
	B		154,0[7]		159,0[10]		162,0[11]		166,0[10]	144,0	163,0[3]	142,0	161,0[3]	139,0	155,0[2]	120,0	123,0[2]	100,0	102,0[2]	89,3	89,9[2]	76,5	76,6[2]
52	-		33,2[6]		38,3[9]		40,2[10]		46,8[11]	58,7*	58,7*	54,8*	54,8*	51,2*	51,2*	48,1*	48,1*	47,1*	47,1*	45,2*	45,2*	43,0*	43,0*
	B		137,0[9]		142,0[9]		144,0[10]		148,0[11]	128,0	148,0[7]	127,0	146,0[4]	124,0	142,0[3]	116,0	122,0[2]	97,5	101,0[2]	87,7	88,9[2]	75,0	75,6[2]
56	-		25,2[5]		29,7[8]		30,7[9]		36,6[10]		45,4[11]	49,5*	49,5*	46,0*	46,0*	42,9*	42,9*	42,0*	42,0*	40,2*	40,2*	38,0*	38,0*
	B		123,0[5]		127,0[8]		128,0[9]		133,0[10]		133,0[8]	115,0	132,0[5]	112,0	130,0[3]	109,0	117,0[3]	94,6	99,1[2]	86,0	87,8[2]	73,5	74,5[2]
60	-				22,4[7]		22,6[8]		28,6[10]		36,7[11]	45,1*	45,1*	41,4*	41,4*	38,4*	38,4*	37,5*	37,5*	35,7*	35,7*	33,6*	33,6*
	B				113,0[7]		114,0[8]		119,0[10]		122,0[10]	106,0	120,0[5]	102,0	117,0[3]	99,3	112,0[3]	91,6	96,9[3]	84,5	86,4[3]	72,1	73,4[2]
64	-						15,6[7]		21,0[9]		28,9[11]	41,6*	41,6*	37,5*	37,5*	34,4*	34,4*	33,5*	33,5*	31,8*	31,8*	29,7*	29,7*
	B						101,0[7]		107,0[9]		112,0[11]	89,4	110,0[6]	92,5	108,0[4]	90,4	104,0[2]	88,0	94,6[2]	82,8	85,7[3]	70,6	72,2[3]
68	-						9,6[6]		14,3[8]		22,0[11]		30,5[11]	34,0*	34,0*	30,9*	30,9*	30,0*	30,0*	28,3*	28,3*	26,3*	26,3*
	B						90,5[6]		95,0[8]		102,0[11]		101,0[7]	84,6	98,9[5]	82,4	96,7[3]	81,9	91,3[3]	79,8	83,8[3]	69,2	71,3[3]
72	-								8,5[7]		15,5[11]		24,1[11]	31,1*	31,1*	27,8*	27,8*	26,9*	26,9*	25,2*	25,2*	23,2*	23,2*
	B								84,8[7]		91,9[11]		94,2[9]	76,9	91,7[5]	75,6	89,3[3]	75,1	88,2[3]	73,5	81,9[3]	67,3	70,0[3]
76	-										9,4[10]		18,2[11]	28,5*	28,5*	25,1*	25,1*	24,1*	24,1*	22,4*	22,4*	20,4*	20,4*
	B										81,7[10]		87,4[10]	66,4	85,1[6]	69,5	82,9[4]	69,0	81,8[4]	67,6	79,4[3]	65,3	68,7[4]
80	-												12,7[11]		19,0[11]	22,7*	22,7*	21,6*	21,6*	19,9*	19,9*	18,0*	18,0*
	B										72,7[9]		80,9[11]		79,3[7]	63,9	77,3[5]	63,4	76,6[4]	62,1	74,2[4]	60,4	67,2[4]
84	-												7,6[11]		14,1[11]	20,6*	20,6*	19,3*	19,3*	17,7*	17,7*	15,7*	15,7*
	B										64,6[8]		73,0[11]		74,1[8]	58,5	71,6[6]	58,4	71,1[5]	57,1	69,7[4]	55,5	65,7[4]
88	-															18,6*	18,6*	17,3*	17,3*	15,6*	15,6*	13,7*	13,7*
	B												64,9[10]		68,6[9]	50,2	66,5[6]	53,8	65,9[5]	52,8	64,6[4]	51,2	62,6[4]
92	-																	15,6*	15,6*	13,8*	13,8*	11,8*	11,8*
	B												57,7[9]		64,2[11]		61,8[7]	48,6	61,2[6]	48,8	59,9[5]	47,1	58,2[4]
96	-																	12,2	12,2	12,2*	12,2*	10,2*	10,2*
	B												51,1[8]		57,9[11]		57,6[8]	36,9	57,0[6]	44,5	55,7[5]	43,4	53,8[4]
100	-																			11,0*	11,0*	8,7*	8,7*
	B														51,4[10]		54,1[9]		53,2[7]	37,7	51,9[6]	39,8	50,3[5]
104	-																					7,5*	7,5*
	B														45,3[9]		50,7[11]		49,9[8]		48,4[7]	35,1	46,6[6]
108	-																						
	B														39,8[8]		45,9[11]		46,8[10]		45,3[8]	26,1	43,7[6]
112	-																						
	B																40,3[10]		42,9[11]		42,8[9]		41,0[7]
116	-																						
	B																35,2[9]		38,1[10]		39,3[10]		38,3[8]
120	-																						
	B																30,4[8]		33,0[9]		35,6[11]		35,1[9]
124	-																						
	B																		28,3[8]		31,2[10]		32,1[10]
128	-																						
	B																		23,9[7]		26,6[9]		28,7[10]
132	-																						
	B																				22,3[8]		24,2[9]
136	-																						
	B																						20,1[8]
140	-																						
	B																						16,7[7]

1) 12°; 2) 17°; 3) 22°; 4) 27°; 5) 32°; 6) 37°; 7) 42°; 8) 47°; 9) 52°; 10) 57°; 11) 62°

Traglasten
Lifting capacities

HSDWB

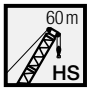

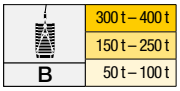

Vorläufig
Preliminary

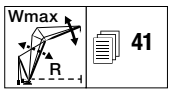

m		HS 60																					
		W 18		W 24		W 30		W 36		W 48		W 60		W 72		W 84		W 90		W 96		W 102	
		87°/85	WVmax	87°/85	WVmax	87°/85	WVmax	87°/85	WVmax	87°/85	WVmax	87°/85	WVmax	87°/85	WVmax	87°/85	WVmax	87°/85	WVmax	87°/85	WVmax	87°/85	WVmax
12	-	332,0*	332,0*																				
	B	449,0*	449,0*																				
14	-	286,0*	286,0*	275,0*	275,0*																		
	B	450,0	450,0[2]	422,0*	422,0*	393,0*	393,0*																
16	-	251,0*	251,0*	242,0*	242,0*	235,0*	235,0*	228,0*	228,0*														
	B	450,0	450,0	431,0	431,0[1]	376,0*	389,0[1]	344,0*	344,0*														
18	-	224,0*	224,0*	215,0*	215,0*	209,0*	209,0*	203,0*	203,0*														
	B	444,0	444,0	411,0	419,0[1]	388,0	389,0[1]	333,0*	345,0[1]														
20	-	201,0*	201,0*	194,0*	194,0*	188,0*	188,0*	183,0*	183,0*	173,0*	173,0*												
	B	407,0	436,0[1]	391,0	407,0[1]	374,0	378,0[1]	344,0	345,0[1]	269,0*	269,0*												
22	-	183,0*	183,0*	176,0*	176,0*	171,0*	171,0*	166,0*	166,0*	157,0*	157,0*	149,0*	149,0*										
	B	350,0	417,0[1]	367,0	395,0[1]	357,0	368,0[1]	332,0	338,0[1]	263,0*	272,0[1]	212,0*	212,0*										
24	-	161,0	163,0[11]	161,0*	161,0*	156,0*	156,0*	152,0*	152,0*	144,0*	144,0*	136,0*	136,0*										
	B	305,0	385,0[2]	330,0	379,0[1]	335,0	358,0[1]	319,0	331,0[1]	271,0	271,0	209,0*	212,0[1]										
26	-		146,0[11]	148,0*	148,0*	143,0*	143,0*	140,0*	140,0*	132,0*	132,0*	125,0*	125,0*	119,0*	119,0*								
	B		356,0[3]	293,0	357,0[1]	315,0	344,0[1]	303,0	325,0[1]	266,0	266,0	208,0	213,0[1]	164,0*	164,0*								
28	-		131,0[11]	138,0*	138,0*	133,0*	133,0*	129,0*	129,0*	122,0*	122,0*	116,0*	116,0*	110,0*	113,0[1]	105,0*	105,0*						
	B		331,0[5]	261,0	335,0[1]	296,0	322,0[1]	284,0	316,0[1]	258,0	260,0[2]	210,0	210,0	161,0*	164,0[1]	125,0*	125,0*						
30	-		116,0[11]	123,0	123,0[11]	123,0*	123,0*	120,0*	120,0*	113,0*	113,0*	107,0*	107,0*	102,0*	106,0[1]	97,0*	98,4[1]	95,4*	95,4*				
	B		309,0[7]	226,0	312,0[1]	277,0	302,0[2]	267,0	297,0[1]	248,0	256,0[2]	207,0	207,0	163,0	163,0[1]	123,0*	124,0[1]	107,0*	107,0*	92,6*	92,6*		
32	-		104,0[11]		112,0[11]	115,0*	115,0*	111,0*	111,0*	105,0*	105,0*	99,8*	99,8*	94,8*	99,4[1]	90,2*	92,9[1]	88,7*	90,2[1]	85,9*	85,9*	78,6*	78,6*
	B		287,0[7]		290,0[1]	262,0	283,0[3]	253,0	279,0[2]	236,0	251,0[2]	204,0	204,0[2]	161,0	161,0	121,0*	123,0[1]	105,0*	106,0[1]	91,6*	91,6*	78,9*	78,9*
34	-		93,7[11]		101,0[11]	108,0*	108,0*	104,0*	104,0*	98,1*	98,1*	93,1*	93,1*	88,3*	92,6[1]	84,0*	87,4[1]	82,7*	85,2[1]	80,0*	81,6[1]	76,5*	76,5*
	B		267,0[8]		268,0[5]	243,0	266,0[5]	241,0	263,0[3]	225,0	246,0[2]	200,0	204,0[2]	160,0	160,0	123,0	123,0	104,0*	106,0[1]	90,4*	91,2[1]	77,9*	77,9*
36	-		82,8[10]		90,1[11]	96,5	96,5	97,8*	97,8*	91,7*	91,7*	87,0*	87,0*	82,5*	85,8[1]	78,5*	81,9[1]	77,2*	80,2[1]	74,7*	77,1[1]	71,9*	71,9*
	B		251,0[10]		250,0[6]	209,0	251,0[6]	229,0	249,0[4]	215,0	241,0[2]	196,0	204,0[2]	158,0	158,0[2]	121,0	121,0	105,0	105,0	89,3*	90,8[1]	77,0*	77,7[1]
38	-		74,9[10]		81,9[11]		87,4[11]	92,2*	92,2*	86,1*	86,1*	81,5*	81,5*	77,3*	79,0[1]	73,4*	76,4[1]	72,2*	75,2[1]	69,8*	72,5[1]	67,1*	67,3[1]
	B		235,0[10]		234,0[5]		237,0[7]	212,0	235,0[5]	205,0	229,0[2]	191,0	204,0[2]	156,0	158,0[2]	120,0	120,0	103,0	103,0	90,1	90,1	76,2*	76,2*
40	-		66,3[9]		73,9[11]		78,8[11]	87,4*	87,4*	81,0*	81,0*	76,6*	76,6*	72,5*	72,5*	68,8*	70,9[1]	67,7*	70,2[1]	65,4*	67,9[1]	62,7*	63,2[1]
	B		220,0[9]		221,0[7]		223,0[9]	192,0	222,0[5]	195,0	217,0[3]	184,0	204,0[2]	154,0	158,0[2]	119,0	119,0[2]	102,0	102,0	89,3	89,3	76,7	76,7
44	-		53,4[9]		59,9[11]		63,9[11]		70,4[11]	72,2*	72,2*	68,0*	68,0*	64,2*	64,2*	60,7*	60,7*	59,7*	60,2[1]	57,6*	58,8[1]	55,1*	55,1*
	B		194,0[9]		199,0[11]		199,0[10]		199,0[8]	172,0	196,0[4]	167,0	191,0[2]	151,0	158,0[2]	117,0	118,0[2]	99,1	99,5[2]	87,5	87,5	75,2	75,2
48	-		42,1[8]		47,5[10]		51,1[11]		57,2[11]	64,9*	64,9*	60,7*	60,7*	57,1*	57,1*	53,8*	53,8*	52,9*	52,9*	50,9*	50,9*	48,5*	48,5*
	B		172,0[8]		177,0[10]		177,0[11]		179,0[9]	151,0	180,0[7]	149,0	174,0[3]	144,0	155,0[2]	115,0	118,0[2]	96,2	98,2[2]	86,0	86,5[2]	73,7	73,8[2]
52	-		32,6[7]		37,2[9]		39,9[10]		46,4[11]	59,1*	59,1*	54,6*	54,6*	51,0*	51,0*	47,9*	47,9*	47,0*	47,0*	45,0*	45,0*	42,8*	42,8*
	B		152,0[7]		156,0[9]		159,0[10]		160,0[10]	130,0	165,0[1]	134,0	157,0[4]	130,0	148,0[3]	113,0	117,0[2]	93,5	96,9[2]	84,4	85,6[2]	72,3	72,9[2]
56	-		24,6[6]		28,5[8]		31,0[10]		36,9[11]		46,0[11]	49,3*	49,3*	45,8*	45,8*	42,7*	42,7*	41,9*	41,9*	40,1*	40,1*	37,9*	37,9*
	B		135,0[6]		139,0[8]		142,0[10]		146,0[11]		150,0[1]	120,0	142,0[4]	118,0	138,0[3]	110,0	116,0[3]	90,8	95,5[2]	82,9	84,8[2]	71,0	72,0[2]
60	-		17,8[5]		21,5[6]		22,6[9]		27,8[10]		37,0[11]	44,9*	44,9*	41,3*	41,3*	38,3*	38,3*	37,5*	37,5*	35,6*	35,6*	33,5*	33,5*
	B		121,0[5]		125,0[8]		126,0[9]		131,0[10]		136,0[1]	107,0	129,0[5]	107,0	127,0[3]	103,0	114,0[3]	88,0	93,5[2]	81,4	83,5[2]	69,6	71,1[2]
64	-				15,1[7]		15,4[8]		20,0[9]		29,2[11]	41,3*	41,3*	37,3*	37,3*	34,4*	34,4*	33,5*	33,5*	31,8*	31,8*	29,6*	29,6*
	B				112,0[7]		113,0[8]		117,0[9]		121,0[10]	90,8	118,0[6]	96,9	116,0[3]	94,6	111,0[2]	85,3	91,7[3]	79,7	82,8[3]	68,2	69,8[3]
68	-				9,6[6]		9,1[7]		13,1[8]		22,2[11]		30,4[11]	33,9*	33,9*	30,9*	30,9*	30,0*	30,0*	28,3*	28,3*	26,2*	26,2*
	B				100,0[5]		101,0[7]		104,0[8]		112,0[11]		110,0[6]	87,8	107,0[4]	86,7	104,0[3]	82,4	90,0[3]	77,6	81,7[3]	66,7	69,2[3]
72	-										15,6[11]		23,8[11]	30,9*	30,9*	27,8*	27,8*	26,9*	26,9*	25,2*	25,2*	23,2*	23,2*
	B						90,2[8]		93,6[7]		102,0[11]		102,0[8]	77,4	99,7[5]	79,5	97,3[3]	78,1	88,2[3]	75,1	80,4[3]	65,1	68,0[3]
76	-												17,8[11]	28,6*	28,6*	25,0*	25,0*	24,1*	24,1*	22,4*	22,4*	20,4*	20,4*
	B								84,5[7]		90,9[10]		94,6[9]	67,6	92,9[6]	72,9	90,5[4]	72,7	85,7[4]	70,7	79,1[3]	63,3	67,1[4]
80	-												12,3[11]		18,9[11]	22,6*	22,6*	21,6*	21,6*	19,9*	19,9*	17,9*	17,9*
	B										81,6[9]		87,5[10]		86,4[7]	65,6	83,8[4]	66,7	83,3[4]	65,4	77,1[4]	61,4	66,1[4]
84	-														13,8[11]	20,5*	20,5*	19,3*	19,3*	17,6*	17,6*	15,7*	15,7*
	B										73,3[9]		80,8[11]		80,1[7]	58,6	77,8[5]	60,6	77,4[4]	60,3	75,0[4]	58,3	65,1[4]
88	-															18,8*	18,8*	17,3*	17,3*	15,6*	15,6*	13,7*	13,7*
	B										65,5[8]		72,4[10]		74,5[8]	50,5	72,1[5]	54,4	71,5[4]	55,1	70,1[4]	54,0	63,8[4]
92	-																10,0[11]	15,6*	15,6*	13,8*	13,8*	11,8*	11,8*
	B										58,5[7]		64,8[9]		69,8[9]		67,4[6]	48,5	66,8[5]	49,5	65,4[4]	49,7	61,9[3]
96	-																	11,9	11,9	12,2*	12,2*	10,2*	10,2*
	B												58,2[9]		64,3[10]		63,1[7]	38,8	62,1[6]	44,3	60,9[5]	44,6	58,4[4]
100	-																			10,9*	10,9*	8,7*	8,7*
	B												51,8[8]		57,9[10]		59,4[8]		58,3[6]	37,6	57,0[5]	39,8	55,0[4]
104	-																					7,4*	7,4*
	B												46,0[7]		51,5[9]		55,5[9]		54,9[7]		53,6[6]	35,1	51,9[5]
108	-																						
	B														46,2[9]		50,9[10]		51,3[8]		50,4[7]	27,3	48,6[6]
112	-																						
	B														40,7[8]		46,2[10]		47,0[9]		47,6[8]		45,3[7]
116	-																						
	B														35,7[7]		40,8[9]		43,4[10]		43,2[8]		42,4[7]
120	-																						
	B																35,7[8]		39,0[10]		39,6[9]		39,0[8]
124	-																						
	B																31,5[8]		34,0[9]		36,6[10]		35,6[9]
128	-																						
	B																27,0[7]		29,4[8]		31,7[9]		33,0[10]
132	-																						
	B																		25,1[7]		27,2[8]		29,8[10]
136	-																						
	B																				23,5[8]		25,4[9]
140	-																						
	B																				19,9[7]		21,4[8]
144	-																						
	B																						18,0[7]

1) 12°; 2) 17°; 3) 22°; 4) 27°; 5) 32°; 6) 37°; 7) 42°; 8) 47°; 9) 52°; 10) 57°; 11) 62°

Traglasten
Lifting capacities

HSDWB

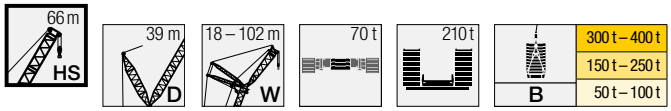

Vorläufig
Preliminary

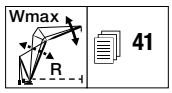

m		HS 66																					
		W 18		W 24		W 30		W 36		W 48		W 60		W 72		W 84		W 90		W 96		W 102	
		87°/85	WVmax	87°/85	WVmax	87°/85	WVmax	87°/85	WVmax	87°/85	WVmax	87°/85	WVmax	87°/85	WVmax	87°/85	WVmax	87°/85	WVmax	87°/85	WVmax	87°/85	WVmax
12	-	317,0*	317,0*																				
	B	421,0*	421,0*																				
14	-	275,0*	275,0*	265,0*	265,0*																		
	B	416,0*	427,0[1]	382,0*	382,0*																		
16	-	241,0*	241,0*	233,0*	241,0[1]	227,0*	227,0*	220,0*	220,0*														
	B	427,0	427,0	362,0*	387,0[1]	343,0*	350,0[1]	314,0*	314,0*														
18	-	215,0*	215,0*	208,0*	215,0[1]	203,0*	203,0*	197,0*	197,0*														
	B	404,0	419,0[1]	374,0	376,0[1]	352,0	352,0	302,0*	311,0[1]														
20	-	194,0*	194,0*	188,0*	188,0[1]	183,0*	183,0*	178,0*	178,0*	167,0*	167,0*												
	B	383,0	412,0[1]	356,0	364,0[2]	339,0	346,0[1]	312,0	312,0[1]	248,0*	248,0*												
22	-	177,0*	177,0*	171,0*	171,0*	166,0*	166,0*	162,0*	162,0*	152,0*	152,0*	144,0*	144,0*										
	B	359,0	405,0[1]	339,0	357,0[2]	325,0	341,0[1]	302,0	310,0[1]	242,0*	250,0[1]	197,0*	197,0*										
24	-	154,0	159,0[11]	156,0*	156,0*	152,0*	152,0*	148,0*	148,0*	139,0*	139,0*	132,0*	133,0[1]										
	B	315,0	377,0[1]	323,0	349,0[2]	312,0	336,0[1]	291,0	307,0[1]	250,0	250,0[1]	195,0*	197,0[1]										
26	-	143,0	143,0	144,0*	144,0*	140,0*	140,0*	136,0*	136,0*	128,0*	128,0*	121,0*	122,0[1]	117,0*	117,0*								
	B	247,0	349,0[2]	301,0	342,0[2]	295,0	332,0[1]	279,0	305,0[1]	242,0	243,0[1]	192,0*	197,0[1]	154,0*	154,0*								
28	-		127,0[11]	134,0*	134,0*	129,0*	129,0*	126,0*	126,0*	118,0*	118,0*	112,0*	112,0[1]	108,0*	110,0[1]	103,0*	103,0*						
	B		325,0[4]	270,0	321,0[2]	278,0	315,0[1]	266,0	302,0[1]	234,0	237,0[1]	196,0	196,0	152,0*	154,0[1]	119,0*	119,0*						
30	-		113,0[11]	119,0	121,0[11]	120,0*	120,0*	117,0*	117,0*	109,0*	109,0*	104,0*	104,0*	100,0*	104,0[1]	95,4*	96,4[1]	92,3*	92,3*				
	B		304,0[8]	236,0	301,0[3]	262,0	296,0[2]	251,0	290,0[1]	226,0	235,0[2]	192,0	192,0	149,0*	153,0[1]	117,0*	118,0[1]	102,0*	102,0*				
32	-		100,0[11]	112,0	112,0	112,0*	112,0*	109,0*	109,0*	102,0*	102,0*	96,5*	96,5*	93,1*	97,3[1]	88,7*	91,1[1]	85,8*	87,0[1]	83,0*	83,0*	75,0*	75,0*
	B		285,0[9]	184,0	282,0[5]	247,0	278,0[3]	238,0	274,0[2]	217,0	233,0[2]	188,0	188,0[2]	152,0	152,0	116,0*	118,0[1]	100,0*	101,0[1]	87,3*	87,3*	75,2*	75,2*
34	-		90,3[11]		98,8[11]	105,0*	105,0*	102,0*	102,0*	94,9*	94,9*	90,0*	90,0*	86,8*	90,7[1]	82,8*	85,8[1]	79,9*	82,1[1]	77,3*	78,6[1]	73,5*	73,5*
	B		266,0[9]		266,0[7]	235,0	262,0[4]	227,0	258,0[2]	209,0	232,0[2]	184,0	188,0[2]	150,0	150,0	117,0	117,0[1]	98,5*	100,0[1]	86,3*	87,0[1]	74,4*	74,4*
36	-		80,5[11]		88,4[11]	93,3	93,9[11]	95,6*	95,6*	88,8*	88,8*	84,2*	84,2*	81,2*	84,2[1]	77,3*	80,4[1]	74,6*	77,3[1]	72,1*	74,2[1]	69,4*	69,4[1]
	B		248,0[10]		250,0[7]	214,0	247,0[5]	217,0	244,0[3]	200,0	230,0[2]	180,0	189,0[2]	149,0	149,0	116,0	116,0	99,8	99,8	85,2*	86,7[1]	73,7*	74,2[1]
38	-		71,1[10]		79,3[11]	88,7	88,7	90,1*	90,1*	83,3*	83,3*	78,9*	78,9*	76,1*	77,7[1]	72,5*	75,1[1]	69,8*	72,4[1]	67,4*	69,7[1]	64,7*	65,5[1]
	B		232,0[10]		234,0[7]	168,0	233,0[6]	206,0	231,0[4]	192,0	224,0[2]	175,0	189,0[2]	148,0	149,0[2]	115,0	115,0	98,5	98,5	86,3	86,3	72,9*	73,9[1]
40	-		63,9[10]		71,8[11]		77,1[11]	85,3*	85,3*	78,4*	78,4*	74,1*	74,1*	71,5*	71,5*	68,0*	69,8[1]	65,5*	67,6[1]	63,1*	65,3[1]	60,5*	61,5[1]
	B		219,0[10]		220,0[8]		221,0[8]	196,0	219,0[5]	184,0	212,0[2]	169,0	189,0[2]	146,0	149,0[2]	114,0	114,0[2]	97,2	97,2	85,4	85,4	73,5	73,5
44	-		50,1[9]		57,4[11]		61,9[11]	72,7	72,7	69,8*	69,8*	65,7*	65,7*	63,3*	63,3*	60,0*	60,0*	57,6*	57,9[1]	55,5*	56,5[1]	53,1*	53,5[1]
	B		192,0[9]		196,0[11]		198,0[10]	144,0	197,0[7]	170,0	193,0[4]	158,0	183,0[2]	141,0	149,0[2]	112,0	113,0[2]	94,6	94,9[2]	83,9	83,9	72,2	72,2
48	-		38,5[8]		45,8[11]		49,4[11]		55,7[11]	62,7*	62,7*	58,6*	58,6*	56,4*	56,4*	53,4*	53,4*	51,1*	51,1*	49,0*	49,0*	46,6*	46,6*
	B		169,0[8]		176,0[11]		176,0[11]		179,0[10]	155,0	174,0[5]	147,0	171,0[3]	135,0	149,0[2]	110,0	113,0[2]	91,9	93,8[2]	82,4	82,9[2]	70,8	70,8[2]
52	-		29,7[8]		35,6[10]		38,9[11]		45,0[11]	57,0*	57,0*	52,7*	52,7*	50,5*	50,5*	47,5*	47,5*	45,3*	45,3*	43,3*	43,3*	41,1*	41,1*
	B		150,0[8]		156,0[10]		158,0[11]		160,0[10]	133,0	158,0[6]	135,0	156,0[4]	128,0	146,0[3]	108,0	112,0[2]	89,4	92,8[2]	80,8	82,2[2]	69,5	70,0[2]
56	-		21,7[7]		26,8[9]		29,0[10]		35,2[11]	48,7	48,7	47,5*	47,5*	45,3*	45,3*	42,5*	42,5*	40,4*	40,4*	38,5*	38,5*	36,3*	36,3*
	B		134,0[7]		138,0[9]		141,0[10]		144,0[11]	98,1	145,0[1]	122,0	142,0[5]	120,0	138,0[3]	105,0	111,0[2]	86,7	91,8[2]	79,3	81,4[2]	68,2	69,2[2]
60	-		14,7[6]		19,1[8]		20,4[9]		26,0[10]		35,1[11]	43,2*	43,2*	40,8*	40,8*	38,1*	38,1*	36,0*	36,0*	34,2*	34,2*	32,1*	32,1*
	B		119,0[9]		123,0[8]		125,0[9]		130,0[10]		132,0[1]	109,0	129,0[5]	110,0	128,0[4]	102,0	111,0[3]	83,9	89,9[2]	77,9	80,4[2]	66,8	68,5[2]
64	-		7,6[2]		12,5[7]		13,8[9]		18,9[10]		27,5[11]	39,7*	39,7*	36,9*	36,9*	34,2*	34,2*	32,1*	32,1*	30,4*	30,4*	28,3*	28,3*
	B		107,0[9]		110,0[7]		112,0[9]		117,0[10]		119,0[10]	93,5	118,0[6]	99,8	117,0[4]	96,6	107,0[2]	81,2	88,2[3]	76,0	79,4[3]	65,4	67,4[2]
68	-				7,2[7]				11,9[9]		20,2[11]	33,7	33,7	33,5*	33,5*	30,8*	30,8*	28,7*	28,7*	27,0*	27,0*	24,9*	24,9*
	B				99,0[7]		99,8[8]		104,0[9]		110,0[11]	66,8	108,0[7]	90,6	107,0[5]	89,4	103,0[4]	78,1	86,6[3]	73,8	78,7[3]	63,9	66,7[3]
72	-										9,4[7]		22,2[11]	30,5*	30,5*	27,7*	27,7*	25,7*	25,7*	24,0*	24,0*	21,9*	21,9*
	B				89,0[6]		89,1[7]		92,9[8]		100,0[11]		100,0[8]	79,9	98,9[5]	82,2	96,4[3]	75,0	85,0[3]	71,6	77,5[3]	62,0	65,8[3]
76	-												16,3[11]	28,1*	28,1*	24,9*	24,9*	22,9*	22,9*	21,2*	21,2*	19,3*	19,3*
	B						79,6[6]		82,9[7]		90,5[11]		93,1[9]	70,6	91,9[6]	75,3	89,8[4]	72,0	82,6[3]	69,2	76,4[3]	60,3	64,7[3]
80	-												8,2[9]	23,3	23,3	22,5*	22,5*	20,5*	20,5*	18,8*	18,8*	16,8*	16,8*
	B								74,1[6]		80,8[10]		86,4[10]	50,7	85,6[7]	68,0	83,4[5]	67,8	80,8[4]	65,8	75,0[4]	58,5	63,9[4]
84	-														13,2[11]	20,3*	20,3*	18,3*	18,3*	16,6*	16,6*	14,6*	14,6*
	B								66,7[8]		72,0[9]		79,4[11]		80,2[8]	60,8	77,8[5]	61,9	75,8[4]	61,1	73,9[4]	56,7	63,0[4]
88	-														8,4[11]	18,5*	18,5*	16,3*	16,3*	14,6*	14,6*	12,6*	12,6*
	B										64,1[8]		72,1[11]		74,2[9]	53,4	73,0[6]	55,4	71,2[5]	56,2	69,5[4]	54,6	62,1[4]
92	-															14,6	14,6	14,6*	14,6*	12,8*	12,8*	10,8*	10,8*
	B										57,2[8]		64,3[10]		68,9[9]	38,1	68,4[7]	49,6	66,7[6]	50,4	65,4[5]	50,5	60,0[5]
96	-																	10,7	10,7	11,3*	11,3*	9,2*	9,2*
	B										50,7[7]		57,0[9]		64,2[11]		63,8[8]	40,9	62,2[7]	45,2	60,8[6]	45,4	58,3[5]
100	-																			10,0*	10,0*	7,8*	7,8*
	B												50,4[8]		58,4[11]		59,1[8]		57,8[7]	38,9	56,6[6]	40,7	54,3[5]
104	-																					6,5*	6,5*
	B												45,0[8]		51,7[10]		55,0[9]		53,8[8]		52,5[7]	36,1	50,8[6]
108	-																						
	B												39,5[7]		45,7[9]		51,4[10]		50,0[8]		48,9[7]	28,9	47,3[6]
112	-																						
	B														40,1[8]		46,4[11]		46,8[10]		45,7[8]		44,1[7]
116	-																						
	B														35,3[8]		41,0[10]		42,9[10]		42,9[9]		41,2[8]
120	-																						
	B														30,6[7]		35,8[9]		38,2[10]		39,1[9]		38,6[8]
124	-																						
	B																30,9[8]		33,6[10]		35,4[10]		36,0[9]
128	-																						
	B																26,8[8]		28,9[9]		31,4[10]		32,1[10]
132	-																						
	B																22,5[7]		24,5[8]		26,8[9]		28,9[10]
136	-																						
	B																		20,5[7]		22,5[8]		25,0[10]
140	-																						
	B																				19,3[8]		21,0[9]
144	-																						
	B																				16,2[7]		17,5[8]
148	-																						
	B																						14,5[7]

1) 12°; 2) 17°; 3) 22°; 4) 27°; 5) 32°; 6) 37°; 7) 42°; 8) 47°; 9) 52°; 10) 57°; 11) 62°

Traglasten
Lifting capacities

HSDWB

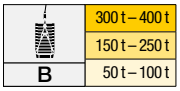

Vorläufig
Preliminary

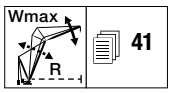

m		HS 72																					
		W 18		W 24		W 30		W 36		W 48		W 60		W 72		W 84		W 90		W 96		W 102	
		87°/85	WVmax	87°/85	WVmax	87°/85	WVmax	87°/85	WVmax	87°/85	WVmax	87°/85	WVmax	87°/85	WVmax	87°/85	WVmax	87°/85	WVmax	87°/85	WVmax	87°/85	WVmax
12	-	305,0*	305,0*																				
	B	385,0*	385,0*																				
14	-	265,0*	265,0*	257,0*	257,0*																		
	B	372,0*	387,0[1]	340,0*	340,0*																		
16	-	234,0*	234,0*	227,0*	234,0[1]	220,0*	220,0*																
	B	382,0	387,0[1]	324,0*	342,0[1]	305,0*	305,0*	278,0*	278,0*														
18	-	209,0*	209,0*	203,0*	210,0[1]	197,0*	197,0*	191,0*	191,0*														
	B	364,0	384,0[1]	335,0	341,0[1]	291,0*	309,0[1]	269,0*	274,0[1]														
20	-	188,0*	188,0*	184,0*	186,0[1]	178,0*	178,0*	173,0*	173,0*	163,0*	163,0*												
	B	345,0	381,0[1]	320,0	340,0[1]	302,0	308,0[1]	278,0	278,0	220,0*	220,0*												
22	-	172,0*	172,0*	167,0*	167,0*	162,0*	162,0*	157,0*	157,0*	148,0*	150,0[1]	141,0*	141,0*										
	B	325,0	378,0[1]	306,0	339,0[1]	291,0	307,0[1]	269,0	274,0[1]	214,0*	221,0[1]	177,0*	177,0*										
24	-	159,0*	159,0*	154,0*	154,0*	148,0*	148,0*	144,0*	144,0*	136,0*	137,0[1]	129,0*	130,0[1]										
	B	306,0	365,0[1]	290,0	338,0[1]	277,0	305,0[1]	260,0	273,0[1]	222,0	222,0[1]	175,0*	176,0[1]										
26	-	138,0	138,0[11]	142,0*	142,0*	136,0*	136,0*	133,0*	133,0*	125,0*	125,0[1]	119,0*	120,0[1]	113,0*	113,0*								
	B	284,0	342,0[2]	274,0	331,0[1]	263,0	304,0[1]	249,0	272,0[1]	216,0	221,0[1]	171,0*	176,0[1]	138,0*	138,0*								
28	-		125,0[11]	132,0*	132,0*	126,0*	126,0*	123,0*	123,0*	115,0*	115,0*	110,0*	110,0[1]	104,0*	107,0[1]	99,6*	99,6*						
	B		320,0[3]	260,0	314,0[1]	248,0	300,0[1]	236,0	270,0[1]	208,0	220,0[1]	175,0	175,0[1]	136,0*	138,0[1]	107,0*	107,0*						
30	-		111,0[11]	124,0*	124,0*	117,0*	117,0*	114,0*	114,0*	107,0*	107,0*	102,0*	102,0*	96,9*	100,0[1]	92,4*	92,4*	89,3*	89,3*				
	B		299,0[5]	243,0	297,0[1]	234,0	288,0[2]	223,0	268,0[1]	201,0	219,0[1]	172,0	172,0	134,0*	137,0[1]	106,0*	106,0*	92,4*	92,4*				
32	-		98,1[11]	109,0	109,0	110,0*	110,0*	107,0*	107,0*	99,8*	99,8*	94,8*	94,8*	90,2*	94,1[1]	86,0*	88,0[1]	83,0*	83,9[1]	79,3*	79,3*		
	B		281,0[9]	208,0	280,0[1]	222,0	272,0[2]	212,0	259,0[2]	194,0	218,0[1]	167,0	167,0[1]	137,0	137,0	104,0*	106,0[1]	91,2*	91,7[1]	79,8*	79,8*	68,7*	68,7*
34	-		88,2[11]		98,0[11]	103,0*	103,0*	99,7*	99,7*	93,2*	93,2*	88,5*	88,5*	84,2*	87,9[1]	80,2*	82,9[1]	77,4*	79,3[1]	74,8*	75,6[1]	67,9*	67,9*
	B		265,0[11]		263,0[1]	212,0	257,0[3]	202,0	249,0[2]	185,0	217,0[1]	164,0	166,0[2]	135,0	135,0	104,0	106,0[1]	89,8*	91,4[1]	79,1*	79,5[1]	68,1*	68,1*
36	-		79,3[11]		88,2[11]	97,6*	97,6*	93,6*	93,6*	87,3*	87,3*	82,9*	82,9*	78,8*	81,6[1]	74,9*	77,8[1]	72,2*	74,6[1]	69,8*	71,4[1]	66,6*	66,6*
	B		248,0[11]		248,0[8]	202,0	243,0[5]	194,0	239,0[3]	177,0	211,0[1]	160,0	167,0[2]	134,0	134,0	106,0	106,0	88,6*	88,6*	78,3*	79,4[1]	67,6*	68,0[1]
38	-		69,6[10]		78,3[11]	85,7	85,7	88,2*	88,2*	81,9*	81,9*	77,7*	77,7*	73,8*	75,4[1]	70,2*	72,7[1]	67,5*	69,9[1]	65,2*	67,1[1]	62,5*	62,5*
	B		231,0[10]		234,0[8]	185,0	230,0[6]	186,0	227,0[4]	170,0	209,0[2]	155,0	167,0[2]	132,0	133,0[2]	105,0	105,0	90,2	90,2	79,3	79,3	67,0	67,8[1]
40	-		62,3[10]		71,1[11]		75,9[11]	83,5*	83,5*	77,1*	77,1*	73,0*	73,0*	69,3*	69,3*	65,9*	67,6[1]	63,3*	65,3[1]	61,0*	62,9[1]	58,4*	58,4*
	B		217,0[10]		221,0[9]		219,0[7]	178,0	216,0[5]	163,0	200,0[2]	150,0	168,0[2]	130,0	133,0[2]	104,0	104,0	89,2	89,2	78,7	78,7	67,7	67,7
44	-		48,7[9]		57,1[11]		60,4[11]	70,3	70,3	68,7*	68,7*	64,8*	64,8*	61,3*	61,3*	58,1*	58,1*	55,7*	56,0[1]	53,6*	54,3[1]	51,2*	51,2*
	B		191,0[9]		195,0[8]		197,0[10]	158,0	195,0[7]	152,0	188,0[9]	139,0	167,0[2]	125,0	133,0[2]	102,0	103,0[2]	86,8	86,9[2]	77,3	77,3	66,6	66,6
48	-		38,2[8]		45,8[11]		48,7[11]		55,1[11]	61,7*	61,7*	57,9*	57,9*	54,6*	54,6*	51,6*	51,6*	49,3*	49,3*	47,3*	47,3*	44,9*	44,9*
	B		170,0[9]		175,0[11]		176,0[11]		177,0[9]	141,0	173,0[5]	130,0	162,0[3]	118,0	133,0[2]	99,9	103,0[2]	84,5	86,1[2]	76,0	76,3[2]	65,4	65,4
52	-		28,6[8]		35,3[10]		37,9[11]		44,2[11]	56,0*	56,0*	52,0*	52,0*	48,8*	48,8*	45,9*	45,9*	43,7*	43,7*	41,8*	41,8*	39,5*	39,5*
	B		150,0[8]		156,0[10]		157,0[11]		160,0[11]	131,0	160,0[1]	122,0	154,0[4]	111,0	130,0[2]	97,3	103,0[2]	82,2	85,3[2]	74,6	75,7[2]	64,2	64,7[2]
56	-		20,4[7]		26,4[9]		28,6[11]		34,4[11]	47,1	47,1	47,0*	47,0*	43,8*	43,8*	41,0*	41,0*	38,9*	38,9*	37,0*	37,0*	34,8*	34,8*
	B		133,0[7]		139,0[9]		141,0[11]		143,0[11]	109,0	147,0[1]	114,0	142,0[5]	105,0	127,0[3]	93,6	102,0[2]	79,7	84,5[2]	73,2	75,2[2]	63,0	64,1[2]
60	-		13,9[7]		19,4[9]		20,4[10]		26,3[11]		34,7[11]	42,6*	42,6*	39,4*	39,4*	36,7*	36,7*	34,6*	34,6*	32,8*	32,8*	30,7*	30,7*
	B		119,0[7]		124,0[9]		126,0[10]		130,0[11]		134,0[1]	106,0	131,0[6]	99,2	124,0[4]	88,9	101,0[3]	77,2	83,0[2]	71,6	74,6[2]	61,8	63,5[2]
64	-				12,7[8]		13,0[9]		18,2[10]		27,0[11]	39,1*	39,1*	35,6*	35,6*	32,9*	32,9*	30,9*	30,9*	29,1*	29,1*	27,0*	27,0*
	B		106,0[6]		111,0[8]		112,0[9]		117,0[10]		122,0[1]	95,7	120,0[7]	92,6	117,0[5]	84,2	99,4[2]	74,7	81,5[3]	69,7	73,3[2]	60,4	62,7[2]
68	-										19,7[11]	32,5	32,5	32,2*	32,2*	29,6*	29,6*	27,5*	27,5*	25,8*	25,8*	23,7*	23,7*
	B		95,3[5]		99,2[7]		99,4[8]		104,0[9]		109,0[11]	75,3	110,0[7]	86,1	108,0[5]	79,1	96,7[2]	72,1	80,1[3]	67,4	72,9[3]	58,8	61,9[3]
72	-										13,4[11]		21,9[11]	29,3*	29,3*	26,5*	26,5*	24,5*	24,5*	22,8*	22,8*	20,8*	20,8*
	B				89,1[8]		89,2[8]		93,4[9]		100,0[11]		100,0[8]	79,9	98,8[6]	73,9	93,7[3]	69,1	78,7[3]	64,8	71,8[3]	56,9	61,2[3]
76	-												16,0[11]	26,9*	26,9*	23,9*	23,9*	21,8*	21,8*	20,1*	20,1*	18,2*	18,2*
	B				80,4[6]		79,7[7]		83,4[8]		90,6[11]		92,4[9]	72,1	91,0[6]	68,7	88,0[5]	65,2	77,3[3]	61,4	70,7[3]	55,2	60,2[3]
80	-													21,7	21,7	21,5*	21,5*	19,4*	19,4*	17,8*	17,8*	15,8*	15,8*
	B						71,1[6]		74,3[7]		80,8[10]		86,4[11]	56,4	84,5[7]	64,0	82,2[5]	60,7	75,6[4]	57,6	69,6[3]	53,0	59,2[3]
84	-														6,7[8]	19,3*	19,3*	17,3*	17,3*	15,6*	15,6*	13,6*	13,6*
	B								66,3[6]		72,5[10]		79,4[11]		78,7[8]	59,6	76,6[5]	56,4	72,9[4]	53,7	68,5[4]	50,5	58,2[4]
88	-															17,5*	17,5*	15,4*	15,4*	13,6*	13,6*	11,7*	11,7*
	B								59,5[6]		64,5[9]		72,2[11]		73,8[9]	54,7	71,7[6]	52,4	69,8[5]	50,0	66,2[4]	47,0	57,5[4]
92	-															13,3	13,3	13,7*	13,7*	11,9*	11,9*	9,9*	9,9*
	B										57,2[8]		64,3[10]		68,7[10]	42,4	67,1[7]	48,7	65,0[6]	46,4	63,8[5]	43,6	56,4[5]
96	-																	9,5	9,5	10,4*	10,4*	8,3*	8,3*
	B										50,6[7]		57,7[10]		63,2[11]		63,1[8]	42,3	61,0[7]	43,0	59,3[6]	40,4	56,0[5]
100	-																			9,1*	9,1*	6,9*	6,9*
	B										44,9[7]		51,0[9]		57,9[11]		58,7[9]		57,3[8]	39,1	55,7[6]	37,3	52,9[6]
104	-																			5,5	5,5	5,7*	5,7*
	B												44,9[8]		51,3[10]		54,2[9]		53,6[8]	30,6	52,4[7]	34,6	50,7[6]
108	-																						
	B												39,4[7]		45,7[10]		50,2[10]		49,8[9]		49,2[8]	30,2	47,9[7]
112	-																						
	B												34,6[7]		40,1[9]		46,4[11]		45,8[9]		45,4[9]		44,5[8]
116	-																						
	B														34,8[8]		40,7[10]		42,9[11]		42,1[9]		41,1[8]
120	-																						
	B														29,9[7]		35,9[10]		38,4[11]		39,0[10]		37,9[9]
124	-																						
	B														25,8[7]		31,0[9]		33,2[10]		35,9[11]		35,2[9]
128	-																						
	B																26,2[8]		28,3[9]		30,9[10]		32,6[11]
132	-																						
	B																22,0[7]		24,4[9]		26,9[10]		29,0[11]
136	-																						
	B																18,9[7]		20,5[8]		22,6[9]		24,5[10]
140	-																						
	B																		17,1[7]		18,7[8]		20,3[9]
144	-																						
	B																				15,7[7]		17,5[9]
148	-																						
	B																				13,1[7]		14,5[8]
152	-																						
	B																						11,6[7]

1) 12°; 2) 17°; 3) 22°; 4) 27°; 5) 32°; 6) 37°; 7) 42°; 8) 47°; 9) 52°; 10) 57°; 11) 62°

Traglasten
Lifting capacities

HSDWB

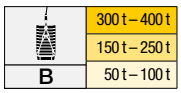

Vorläufig
Preliminary

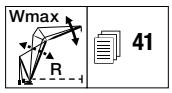

m		HS 78																					
		W 18		W 24		W 30		W 36		W 48		W 60		W 72		W 84		W 90		W 96		W 102	
		87°/85	WVmax	87°/85	WVmax	87°/85	WVmax	87°/85	WVmax	87°/85	WVmax	87°/85	WVmax	87°/85	WVmax	87°/85	WVmax	87°/85	WVmax	87°/85	WVmax	87°/85	WVmax
14	-	255,0*	255,0*	247,0*	247,0*																		
	B	339,0*	352,0(1)	310,0*	310,0*																		
16	-	225,0*	225,0*	218,0*	224,0(1)	213,0*	213,0*																
	B	349,0	350,0(1)	296,0*	309,0(1)	277,0*	277,0*																
18	-	202,0*	202,0*	196,0*	202,0(1)	191,0*	191,0*	186,0*	186,0*														
	B	333,0	349,0(1)	307,0	308,0(1)	266,0*	280,0(1)	245,0*	245,0*														
20	-	182,0*	182,0*	177,0*	180,0(1)	172,0*	172,0*	168,0*	168,0*	157,0*	157,0*												
	B	317,0	347,0(1)	294,0	307,0(1)	277,0	279,0(1)	237,0*	250,0(1)	201,0*	201,0*												
22	-	167,0*	167,0*	161,0*	161,0*	157,0*	157,0*	153,0*	153,0*	143,0*	144,0(1)												
	B	301,0	346,0(1)	280,0	305,0(1)	266,0	277,0(1)	246,0	249,0(1)	195,0*	201,0(1)												
24	-	154,0*	154,0*	148,0*	148,0*	144,0*	144,0*	140,0*	140,0*	131,0*	132,0(1)	124,0*	124,0*										
	B	285,0	344,0(1)	269,0	304,0(1)	256,0	276,0(1)	238,0	247,0(1)	191,0	201,0(1)	161,0*	161,0*										
26	-	133,0	134,0(11)	137,0*	137,0*	133,0*	133,0*	129,0*	129,0*	120,0*	120,0(1)	114,0*	115,0(1)	109,0*	109,0*								
	B	271,0	328,0(2)	254,0	303,0(1)	245,0	275,0(1)	229,0	246,0(1)	197,0	201,0(1)	156,0*	161,0(1)	128,0*	128,0*								
28	-		121,0(11)	127,0*	127,0*	123,0*	123,0*	120,0*	120,0*	111,0*	111,0*	106,0*	106,0(1)	101,0*	101,0(1)								
	B		311,0(3)	240,0	291,0(2)	232,0	274,0(1)	220,0	245,0(1)	191,0	199,0(1)	161,0	161,0(1)	127,0*	128,0(1)	100,0*	100,0*						
30	-		109,0(11)	119,0*	119,0*	114,0*	114,0*	111,0*	111,0*	103,0*	103,0*	98,3*	98,3*	93,4*	93,7(1)	89,1*	89,1*	85,0*	85,0*				
	B		293,0(4)	227,0	279,0(3)	218,0	265,0(1)	208,0	243,0(1)	184,0	198,0(1)	158,0	158,0	124,0*	127,0(1)	98,9*	98,9*	86,3*	86,3*				
32	-		96,2(11)	104,0	104,0(11)	107,0*	107,0*	104,0*	104,0*	96,3*	96,3*	91,5*	91,5*	87,0*	87,9(1)	82,9*	84,5(1)	80,0*	80,0*	74,3*	74,3*		
	B		276,0(8)	215,0	268,0(4)	206,0	255,0(2)	198,0	238,0(1)	177,0	197,0(1)	153,0	153,0(1)	127,0	127,0(1)	97,6*	99,2(1)	85,6*	85,6*	74,7*	74,7*		
34	-		84,9(11)		94,7(11)	100,0*	100,0*	97,4*	97,4*	90,0*	90,0*	85,4*	85,4*	81,2*	82,0(1)	77,3*	79,6(1)	74,5*	76,0(1)	71,7*	71,7*	64,1*	64,1*
	B		260,0(11)		256,0(5)	197,0	247,0(3)	190,0	233,0(2)	171,0	196,0(1)	150,0	152,0(2)	126,0	126,0	96,7*	99,1(1)	84,6*	85,8(1)	74,2*	74,5(1)	64,1*	64,1*
36	-		76,6(11)		85,4(11)	94,6*	94,6*	91,5*	91,5*	84,2*	84,2*	79,9*	79,9*	75,9*	76,1(1)	72,2*	74,7(1)	69,5*	71,5(1)	67,0*	67,0*	63,2*	63,2*
	B		245,0(11)		242,0(7)	189,0	237,0(4)	181,0	225,0(3)	164,0	194,0(1)	146,0	152,0(2)	124,0	124,0	98,8	98,8	83,4*	83,4*	73,7*	74,6(1)	63,7*	64,0(1)
38	-		68,3(11)		76,0(11)	82,8	82,8	86,2*	86,2*	79,1*	79,1*	75,0*	75,0*	71,1*	71,1*	67,7*	69,7(1)	65,0*	67,0(1)	62,6*	62,6*	60,0*	60,0*
	B		230,0(11)		230,0(9)	182,0	225,0(5)	173,0	217,0(4)	158,0	189,0(2)	142,0	152,0(2)	121,0	122,0(2)	98,1	98,1	85,1	85,1	73,1*	73,1*	63,2*	64,0(1)
40	-		59,3(10)		67,8(11)		74,2(11)	81,5*	81,5*	74,4*	74,4*	70,4*	70,4*	66,7*	66,7*	63,4*	64,8(1)	60,9*	62,5(1)	58,5*	58,5*	56,0*	56,0*
	B		214,0(10)		218,0(10)		214,0(6)	167,0	211,0(4)	152,0	186,0(2)	138,0	152,0(2)	119,0	122,0(2)	97,2	97,2	84,3	84,3	74,4	74,4	62,7*	62,7*
44	-		47,2(10)		54,7(11)		59,0(11)	68,0	68,0	66,2*	66,2*	62,5*	62,5*	59,0*	59,0*	56,0*	56,0*	53,5*	53,5(1)	51,4*	51,4*	49,0*	49,0*
	B		191,0(10)		194,0(10)		195,0(10)	156,0	192,0(6)	140,0	176,0(3)	129,0	153,0(2)	115,0	122,0(2)	95,4	96,3(2)	82,0	82,0	73,2	73,2	63,2	63,2
48	-		35,6(9)		42,9(11)		47,0(11)		53,9(11)	59,4*	59,4*	55,8*	55,8*	52,5*	52,5*	49,6*	49,6*	47,3*	47,3*	45,3*	45,3*	42,9*	42,9*
	B		168,0(9)		172,0(10)		175,0(11)		176,0(8)	130,0	166,0(4)	120,0	147,0(2)	109,0	123,0(2)	92,7	96,0(2)	79,9	81,3(2)	71,9	72,2(2)	62,0	62,0
52	-		26,6(9)		32,9(11)		35,9(11)		42,6(11)	53,8*	53,8*	50,0*	50,0*	46,9*	46,9*	44,1*	44,1*	41,9*	41,9*	39,9*	39,9*	37,7*	37,7*
	B		149,0(9)		155,0(11)		155,0(11)		160,0(11)	123,0	156,0(6)	112,0	140,0(3)	103,0	121,0(2)	89,5	95,9(2)	77,5	80,6(2)	70,5	71,7(2)	61,0	61,4(2)
56	-		18,5(8)		24,3(10)		27,1(11)		33,2(11)	44,6	44,6	45,1*	45,1*	42,0*	42,0*	39,3*	39,3*	37,2*	37,2*	35,3*	35,3*	33,1*	33,1*
	B		132,0(9)		138,0(10)		140,0(11)		143,0(11)	114,0	142,0(7)	105,0	133,0(5)	96,8	118,0(2)	86,1	95,7(2)	75,2	79,9(2)	69,2	71,2(2)	59,8	60,9(2)
60	-		8,6(2)		16,4(9)		18,5(10)		24,8(11)		33,1(11)	40,9*	40,9*	37,8*	37,8*	35,1*	35,1*	33,0*	33,0*	31,2*	31,2*	29,1*	29,1*
	B		117,0(7)		122,0(9)		125,0(10)		128,0(11)		131,0(9)	99,0	126,0(5)	91,0	116,0(2)	82,1	94,3(2)	72,8	78,9(2)	67,5	70,8(2)	58,6	60,4(2)
64	-				10,2(9)		11,6(10)		16,6(10)		25,1(11)	37,4*	37,4*	34,0*	34,0*	31,4*	31,4*	29,4*	29,4*	27,6*	27,6*	25,5*	25,5*
	B		105,0(7)		109,0(9)		111,0(10)		116,0(10)		119,0(10)	92,4	119,0(7)	85,6	110,0(2)	77,7	93,0(2)	70,5	77,4(2)	65,5	69,8(2)	57,0	59,8(2)
68	-								10,3(10)		18,0(11)	30,5	30,5	30,8*	30,8*	28,1*	28,1*	26,1*	26,1*	24,4*	24,4*	22,3*	22,3*
	B		93,8(6)		97,8(8)		99,0(9)		104,0(10)		108,0(11)	79,9	110,0(8)	79,7	103,0(5)	73,1	91,7(2)	67,8	76,0(3)	63,0	69,0(3)	55,4	58,6(3)
72	-										8,0(8)		20,4(11)	27,9*	27,9*	25,2*	25,2*	23,2*	23,2*	21,5*	21,5*	19,5*	19,5*
	B		83,9(5)		87,3(7)		87,9(8)		92,3(9)		98,1(11)		99,8(8)	74,1	98,6(6)	68,4	88,8(3)	64,4	74,8(3)	60,0	68,0(3)	53,5	58,2(3)
76	-												14,4(11)	25,5*	25,5*	22,6*	22,6*	20,6*	20,6*	18,9*	18,9*	16,9*	16,9*
	B				78,1(6)		78,7(8)		82,8(9)		89,1(11)		91,2(9)	68,9	91,7(7)	63,6	84,9(3)	60,6	73,6(3)	56,8	67,0(3)	51,6	57,3(3)
80	-												8,7(11)	20,0	20,0	20,2*	20,2*	18,2*	18,2*	16,6*	16,6*	14,6*	14,6*
	B				70,3(6)		70,0(7)		73,8(8)		80,2(11)		84,2(10)	59,5	84,2(8)	59,3	80,6(6)	56,4	71,9(4)	53,4	66,0(3)	49,3	56,3(3)
84	-															18,2*	18,2*	16,1*	16,1*	14,4*	14,4*	12,5*	12,5*
	B						62,2(6)		65,5(7)		71,2(10)		77,8(11)		77,6(8)	55,2	75,5(7)	52,5	70,9(4)	49,8	64,8(4)	46,4	55,4(3)
88	-															16,4*	16,4*	14,2*	14,2*	12,5*	12,5*	10,6*	10,6*
	B								58,1(6)		63,4(10)		70,8(11)		71,9(9)	51,3	70,6(7)	48,8	66,8(5)	46,4	64,0(4)	43,3	54,5(4)
92	-															11,8	11,8	12,6*	12,6*	10,8*	10,8*	8,8*	8,8*
	B								51,8(8)		56,1(9)		63,8(11)		67,2(10)	44,8	65,6(7)	45,3	62,9(5)	43,1	60,7(5)	40,2	53,9(4)
96	-																	11,4*	11,4*	9,3*	9,3*	7,3*	7,3*
	B										49,3(8)		56,4(10)		62,3(11)		61,4(8)	42,2	59,0(7)	39,9	57,6(5)	37,3	53,0(5)
100	-																			8,1*	8,1*	5,9*	5,9*
	B										43,3(7)		50,3(10)		56,8(11)		57,5(9)		55,7(8)	36,9	54,1(6)	34,4	51,1(5)
104	-																						
	B										38,0(7)		44,1(9)		50,9(11)		53,8(10)		52,1(8)	32,1	51,1(7)	31,6	49,2(8)
108	-																						
	B												38,4(8)		44,6(10)		49,6(11)		49,1(10)		47,9(8)	29,3	45,9(7)
112	-																						
	B												33,1(7)		39,3(10)		45,4(11)		45,4(10)		44,7(9)		43,1(8)
116	-																						
	B												28,6(7)		34,1(9)		40,4(11)		41,5(11)		41,0(10)		40,1(9)
120	-																						
	B														29,0(8)		34,9(10)		37,6(11)		37,8(10)		37,2(9)
124	-																						
	B														24,5(7)		30,3(10)		32,8(11)		35,0(11)		33,9(9)
128	-																						
	B														20,8(7)		25,6(9)		28,0(10)		30,8(11)		31,3(11)
132	-																						
	B																21,4(8)		23,5(9)		26,0(10)		28,3(11)
136	-																						
	B																17,8(7)		19,9(9)		22,0(10)		24,3(11)
140	-																						
	B																15,0(7)		16,5(8)		18,4(9)		20,3(10)
144	-																						
	B																		13,4(7)		15,2(8)		16,6(9)
148	-																						
	B																				12,1(7)		13,9(9)
152	-																						
	B																				9,7(7)		11,1(8)
156	-																						
	B																						8,3(7)

1) 12°; 2) 17°; 3) 22°; 4) 27°; 5) 32°; 6) 37°; 7) 42°; 8) 47°; 9) 52°; 10) 57°; 11) 62°

Traglasten
Lifting capacities

HSDWB

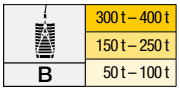

		HS 84																					
		W 18		W 24		W 30		W 36		W 48		W 60		W 72		W 84		W 90		W 96		W 102	
m		87°/85	WVmax	87°/85	WVmax	87°/85	WVmax	87°/85	WVmax	87°/85	WVmax	87°/85	WVmax	87°/85	WVmax	87°/85	WVmax	87°/85	WVmax	87°/85	WVmax	87°/85	WVmax
14	-	246,0*	246,0*	238,0*	238,0*																		
	B	305,0*	314,0(1)	278,0*	278,0*																		
16	-	218,0*	218,0*	211,0*	216,0(1)	206,0*	206,0*																
	B	315,0	315,0	267,0*	276,0(1)	249,0*	249,0*																
18	-	195,0*	195,0*	190,0*	195,0(1)	185,0*	185,0*	180,0*	180,0*														
	B	301,0	310,0(1)	276,0	276,0(1)	240,0*	249,0(1)	221,0*	221,0*														
20	-	177,0*	177,0*	172,0*	175,0(1)	167,0*	167,0*	163,0*	163,0*	152,0*	152,0*												
	B	288,0	308,0(1)	266,0	273,0(1)	249,0	249,0(1)	213,0*	223,0(1)	180,0*	180,0*												
22	-	162,0*	162,0*	157,0*	157,0*	153,0*	153,0*	149,0*	149,0*	139,0*	139,0*												
	B	274,0	307,0(1)	254,0	271,0(1)	240,0	247,0(1)	222,0	223,0(1)	176,0*	179,0(1)												
24	-	149,0*	149,0*	144,0*	144,0*	140,0*	140,0*	137,0*	137,0*	127,0*	127,0*	121,0*	121,0*										
	B	261,0	305,0(1)	244,0	270,0(1)	231,0	245,0(1)	215,0	221,0(1)	171,0*	179,0(1)	144,0*	144,0*										
26	-	129,0	131,0(11)	133,0*	133,0*	129,0*	129,0*	126,0*	126,0*	118,0*	118,0*	112,0*	113,0(1)	107,0*	107,0*								
	B	249,0	298,0(1)	233,0	268,0(1)	222,0	244,0(1)	207,0	219,0(1)	176,0	178,0(1)	140,0*	144,0(1)	117,0*	117,0*								
28	-		118,0(11)	124,0*	124,0*	120,0*	120,0*	117,0*	117,0*	109,0*	109,0*	104,0*	104,0(1)	98,7*	99,9(1)								
	B		286,0(2)	220,0	264,0(1)	212,0	242,0(1)	199,0	218,0(1)	171,0	177,0(1)	136,0*	144,0(1)	114,0*	116,0(1)								
30	-		106,0(11)	116,0*	116,0*	111,0*	111,0*	109,0*	109,0*	101,0*	101,0*	96,3*	96,3*	91,7*	94,2(1)	85,8*	85,8*	77,9*	77,9*				
	B		273,0(2)	209,0	254,0(2)	200,0	240,0(1)	190,0	216,0(1)	165,0	176,0(1)	141,0	143,0(1)	111,0*	115,0(1)	89,5*	89,5*	78,2*	78,2*				
32	-		94,4(11)	101,0	102,0(11)	104,0*	104,0*	102,0*	102,0*	94,2*	94,2*	89,7*	89,7*	85,4*	88,4(1)	79,8*	81,1(1)	76,0*	76,0*	67,7*	67,7*		
	B		261,0(7)	199,0	245,0(2)	190,0	233,0(1)	182,0	214,0(1)	160,0	175,0(1)	138,0	142,0(1)	115,0	115,0(1)	88,5*	89,5(1)	77,5*	77,5*	67,8*	67,8*		
34	-		82,7(11)		92,5(11)	97,7*	97,7*	95,3*	95,3*	88,1*	88,1*	83,8*	83,8*	79,9*	82,7(1)	74,4*	76,4(1)	71,6*	71,6*	66,2*	66,2*	58,3*	58,3*
	B		252,0(10)		236,0(2)	182,0	226,0(1)	174,0	208,0(2)	155,0	174,0(1)	135,0	142,0(1)	113,0	113,0	87,0*	89,4(1)	76,8*	77,8(1)	67,3*	67,5(1)	58,3*	58,3*
36	-		74,0(11)		83,6(11)	92,2*	92,2*	89,5*	89,5*	82,5*	82,5*	78,5*	78,5*	74,7*	77,0(1)	69,5*	71,6(1)	66,8*	66,8*	63,0*	63,0*	57,8*	57,8*
	B		240,0(11)		227,0(2)	175,0	219,0(1)	167,0	204,0(2)	150,0	173,0(1)	131,0	141,0(1)	111,0	111,0	89,4	89,4	75,9*	77,9(1)	66,8*	67,6(1)	57,8*	58,2(1)
38	-		66,4(11)		74,7(11)	80,1	80,1	84,3*	84,3*	77,5*	77,5*	73,6*	73,6*	70,0*	71,2(1)	65,1*	66,9(1)	62,4*	62,4*	60,1*	60,1*	57,0*	57,0*
	B		227,0(11)		219,0(8)	168,0	212,0(1)	159,0	199,0(2)	144,0	169,0(1)	128,0	141,0(1)	109,0	110,0(2)	88,9	88,9	77,7	77,7	66,3*	67,7(1)	57,5*	58,2(1)
40	-		58,7(11)		65,8(11)		72,6(11)	79,7*	79,7*	72,9*	72,9*	69,2*	69,2*	65,8*	65,8*	61,0*	62,1(1)	58,5*	58,5*	56,1*	56,1*	53,6*	53,6*
	B		213,0(11)		213,0(11)		205,0(6)	154,0	193,0(4)	139,0	167,0(2)	125,0	135,0(2)	107,0	109,0(2)	87,9	87,9	77,2	77,2	67,6	67,6	58,0	58,0
44	-		45,1(10)		53,1(11)		58,0(11)	65,9	65,9	65,0*	65,0*	61,5*	61,5*	58,3*	58,3*	53,8*	53,8*	51,4*	51,4*	49,2*	49,2*	46,8*	46,8*
	B		189,0(10)		192,0(11)		190,0(9)	143,0	181,0(2)	129,0	161,0(2)	117,0	136,0(2)	103,0	109,0(2)	85,3	86,1(2)	75,4	75,4	66,9	66,9	57,9	57,9
48	-		34,1(10)		40,8(11)		45,5(11)		53,0(11)	58,3*	58,3*	54,9*	54,9*	51,9*	51,9*	47,6*	47,6*	45,3*	45,3*	43,3*	43,3*	40,9*	40,9*
	B		167,0(10)		170,0(11)		173,0(11)		172,0(8)	120,0	154,0(2)	110,0	134,0(2)	98,6	109,0(2)	82,5	86,0(2)	73,3	74,5(2)	65,7	66,1(2)	57,1	57,1
52	-		24,8(9)		31,6(11)		35,0(11)		41,3(11)	52,7*	52,7*	49,3*	49,3*	46,4*	46,4*	42,3*	42,3*	40,1*	40,1*	38,1*	38,1*	35,8*	35,8*
	B		148,0(9)		153,0(11)		154,0(11)		159,0(11)	113,0	146,0(2)	103,0	131,0(2)	93,5	109,0(2)	79,7	85,8(2)	71,2	74,0(2)	64,0	65,7(2)	56,1	56,5(2)
56	-		16,4(8)		22,5(10)		25,8(11)		32,3(11)	43,1	43,1	44,5*	44,5*	41,6*	41,6*	37,6*	37,6*	35,5*	35,5*	33,6*	33,6*	31,4*	31,4*
	B		131,0(8)		137,0(10)		138,0(11)		143,0(11)	106,0	137,0(7)	96,6	128,0(2)	88,0	108,0(2)	76,8	85,7(2)	69,0	73,4(2)	62,2	65,3(2)	54,9	56,0(2)
60	-		9,9(8)		15,3(10)		17,6(11)		23,4(11)		32,5(11)	40,3*	40,3*	37,4*	37,4*	33,5*	33,5*	31,4*	31,4*	29,6*	29,6*	27,5*	27,5*
	B		117,0(8)		122,0(10)		124,0(11)		127,0(11)		130,0(9)	91,1	120,0(2)	83,0	106,0(2)	73,3	84,6(2)	66,8	72,7(2)	60,3	65,0(2)	53,4	55,6(2)
64	-						7,1(6)		16,3(11)		24,2(11)	36,7*	36,7*	33,8*	33,8*	29,9*	29,9*	27,9*	27,9*	26,1*	26,1*	24,0*	24,0*
	B		104,0(7)		108,0(9)		111,0(10)		115,0(11)		120,0(11)	85,3	110,0(6)	78,3	105,0(2)	69,4	83,3(2)	63,9	71,4(2)	58,3	64,2(2)	51,8	55,1(2)
68	-										17,3(11)	29,5	29,5	30,5*	30,5*	26,7*	26,7*	24,7*	24,7*	23,0*	23,0*	20,9*	20,9*
	B		92,3(6)		96,4(8)		97,9(9)		103,0(10)		108,0(11)	79,9	106,0(6)	73,6	99,4(3)	65,5	82,0(2)	60,9	70,1(3)	56,1	63,1(2)	50,0	54,1(2)
72	-												20,1(11)	27,6*	27,6*	23,9*	23,9*	21,8*	21,8*	20,1*	20,1*	18,1*	18,1*
	B		82,8(6)		86,7(8)		87,7(9)		92,5(10)		97,2(11)		100,0(9)	68,8	92,4(3)	61,6	80,8(3)	57,4	69,1(3)	53,3	62,4(3)	48,2	53,6(3)
76	-												10,6(5)	25,2*	25,2*	21,3*	21,3*	19,3*	19,3*	17,6*	17,6*	15,6*	15,6*
	B		73,8(5)		77,2(7)		77,8(8)		82,2(9)		88,4(11)		92,2(10)	63,9	86,1(4)	57,7	79,9(3)	54,1	68,0(3)	50,4	61,6(3)	45,9	52,8(3)
80	-													19,3	19,3	19,0*	19,0*	17,0*	17,0*	15,3*	15,3*	13,3*	13,3*
	B				69,0(6)		69,0(7)		72,8(8)		79,7(11)		84,0(10)	59,8	82,0(8)	53,7	76,0(4)	50,7	66,7(3)	47,5	60,7(3)	43,8	51,9(3)
84	-														10,8(11)	17,0*	17,0*	14,9*	14,9*	13,3*	13,3*	11,3*	11,3*
	B				61,8(6)		61,5(7)		65,1(8)		71,3(11)		77,2(11)		77,7(9)	49,9	71,7(4)	46,9	65,9(4)	44,4	59,4(3)	41,2	51,1(3)
88	-															15,2*	15,2*	13,1*	13,1*	11,4*	11,4*	9,4*	9,4*
	B						54,3(6)		57,6(7)		63,1(10)		70,5(11)		71,9(10)	46,4	67,2(5)	43,6	63,1(5)	41,2	58,8(4)	38,2	50,1(3)
92	-															10,4	10,4	11,5*	11,5*	9,7*	9,7*	7,7*	7,7*
	B								50,7(6)		55,5(9)		63,7(11)		66,7(10)	43,4	63,6(5)	40,4	61,2(5)	38,3	56,7(5)	35,3	49,5(4)
96	-																	10,2*	10,2*	8,3*	8,3*	6,2*	6,2*
	B								44,8(6)		49,1(9)		56,7(11)		62,0(11)		59,8(9)	37,6	57,4(6)	35,4	55,5(5)	32,7	48,4(5)
100	-																			7,0*	7,0*		
	B										42,9(8)		50,0(10)		56,4(11)		55,9(9)		53,8(7)	32,6	52,0(6)	30,2	48,0(5)
104	-																						
	B										37,2(7)		43,5(9)		50,8(11)		52,4(10)		50,6(9)	30,4	48,7(7)	27,6	46,3(6)
108	-																						
	B										32,2(7)		38,2(9)		45,0(11)		48,8(11)		47,6(10)		45,9(8)	25,5	43,7(6)
112	-																						
	B												32,9(6)		39,1(10)		44,3(11)		45,0(11)		43,3(9)		41,3(7)
116	-																						
	B												27,9(7)		33,7(9)		39,6(11)		40,9(11)		40,9(10)		38,8(8)
120	-																						
	B												23,6(7)		29,1(9)		34,6(11)		36,8(11)		37,7(11)		36,4(10)
124	-																						
	B														24,4(8)		29,5(10)		32,1(11)		34,0(11)		33,9(11)
128	-																						
	B														20,1(7)		24,7(9)		27,0(10)		30,0(11)		30,6(11)
132	-																						
	B														17,1(7)		21,0(9)		22,9(10)		25,8(11)		27,4(11)
136	-																						
	B																17,2(8)		19,0(9)		21,5(10)		23,6(11)
140	-																						
	B																14,1(7)		15,7(8)		17,5(9)		19,3(10)
144	-																						
	B																11,5(7)		12,9(8)		14,7(9)		16,4(10)
148	-																						
	B																		10,0(7)		11,7(8)		13,3(9)
152	-																						
	B																				8,8(7)		10,3(8)
156	-																						
	B																				6,5(7)		7,8(8)

1) 12°; 2) 17°; 3) 22°; 4) 27°; 5) 32°; 6) 37°; 7) 42°; 8) 47°; 9) 52°; 10) 57°; 11) 62°

Traglasten
Lifting capacities

HSDWB

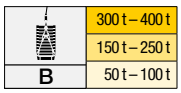

Vorläufig
Preliminary

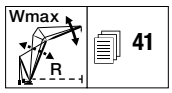

m		HS 90																					
		W 18		W 24		W 30		W 36		W 48		W 60		W 72		W 84		W 90		W 96		W 102	
		87*/85	WVmax	87*/85	WVmax	87*/85	WVmax	87*/85	WVmax	87*/85	WVmax	87*/85	WVmax	87*/85	WVmax	87*/85	WVmax	87*/85	WVmax	87*/85	WVmax	87*/85	WVmax
14	-	236,0*	236,0*																				
	B	274,0*	274,0*																				
16	-	210,0*	210,0*	204,0*	208,0[1]	199,0*	199,0*																
	B	262,0*	278,0[1]	240,0*	246,0[1]	223,0*	223,0*																
18	-	189,0*	189,0*	184,0*	189,0[1]	179,0*	179,0*	173,0*	173,0*														
	B	271,0	277,0[1]	230,0*	245,0[1]	215,0*	222,0[1]	197,0*	197,0*														
20	-	171,0*	171,0*	167,0*	170,0[1]	162,0*	162,0*	157,0*	157,0*	146,0*	146,0*												
	B	260,0	276,0[1]	239,0	245,0[1]	223,0	223,0	191,0*	198,0[1]	161,0*	161,0*												
22	-	157,0*	157,0*	152,0*	152,0*	148,0*	148,0*	143,0*	143,0*	134,0*	134,0[1]												
	B	249,0	275,0[1]	230,0	244,0[1]	216,0	221,0[1]	198,0	198,0[1]	156,0*	158,0[1]												
24	-	144,0*	144,0*	140,0*	140,0*	136,0*	136,0*	132,0*	132,0*	123,0*	124,0[1]	117,0*	117,0*										
	B	239,0	274,0[1]	221,0	243,0[1]	209,0	220,0[1]	192,0	197,0[1]	151,0*	158,0[1]	128,0*	128,0*										
26	-	124,0	128,0[11]	130,0*	130,0*	126,0*	126,0*	122,0*	122,0*	113,0*	113,0[1]	108,0*	108,0[1]	102,0*	102,0*								
	B	228,0	273,0[1]	212,0	242,0[1]	201,0	219,0[1]	185,0	196,0[1]	157,0	157,0[1]	124,0*	127,0[1]	103,0*	103,0*								
28	-	116,0	116,0	121,0*	121,0*	117,0*	117,0*	113,0*	113,0*	105,0*	105,0*	99,7*	99,8[1]	94,9*	94,9*								
	B	218,0	265,0[1]	202,0	241,0[1]	192,0	218,0[1]	179,0	195,0[1]	152,0	157,0[1]	121,0*	126,0[1]	101,0*	101,0*								
30	-		103,0[11]	113,0*	113,0*	109,0*	109,0*	105,0*	105,0*	97,4*	97,4*	92,8*	92,8*	88,2*	88,2[1]	79,5*	79,5*						
	B		256,0[1]	192,0	234,0[1]	183,0	216,0[1]	172,0	194,0[1]	147,0	157,0[1]	125,0	126,0[1]	98,8*	101,0[1]	79,9*	79,9*	70,4*	70,4*				
32	-		92,2[11]	97,6	99,8[11]	102,0*	102,0*	98,1*	98,1*	90,8*	90,8*	86,4*	86,4*	82,2*	82,2[1]	76,6*	76,6*	69,2*	69,2*	61,0*	61,0*		
	B		247,0[1]	183,0	228,0[2]	175,0	213,0[1]	165,0	193,0[1]	143,0	156,0[1]	122,0	126,0[1]	96,5	101,0[1]	78,6*	79,6[1]	69,5*	69,5*	61,0*	61,0*		
34	-		81,2[11]	92,1	92,1	95,3*	95,3*	91,9*	91,9*	84,8*	84,8*	80,7*	80,7*	76,8*	76,8[1]	71,4*	71,4*	67,5*	67,5*	60,4*	60,4*	52,4*	52,4*
	B		238,0[1]	178,0	222,0[2]	167,0	209,0[1]	158,0	191,0[1]	139,0	156,0[1]	120,0	126,0[1]	100,0	101,0[1]	77,2*	79,4[1]	68,6*	69,5[1]	60,5*	60,5*	52,4*	52,4*
36	-		71,1[11]		81,6[11]	89,8*	89,8*	86,3*	86,3*	79,5*	79,5*	75,6*	75,6*	71,9*	71,9*	66,7*	66,7*	64,0*	64,0*	59,3*	59,3*	52,0*	52,0*
	B		228,0[1]		216,0[2]	160,0	205,0[1]	152,0	189,0[1]	135,0	156,0[1]	117,0	126,0[1]	98,7	101,0[1]	79,7	79,7	67,6*	69,5[1]	59,9*	60,6[1]	52,0*	52,2[1]
38	-		63,9[11]		73,1[11]	77,5	78,2[11]	81,3*	81,3*	74,6*	74,6*	70,9*	70,9*	67,3*	67,3*	62,4*	62,4*	59,8*	59,8*	57,4*	57,4*	51,4*	51,4*
	B		217,0[11]		209,0[2]	154,0	200,0[1]	146,0	186,0[1]	130,0	154,0[1]	114,0	126,0[1]	97,2	101,0[1]	78,6	78,6	69,4	69,4	60,6	60,6[1]	51,5*	52,2[1]
40	-		56,7[11]		64,6[11]	73,4	73,4	76,8*	76,8*	70,2*	70,2*	66,6*	66,6*	63,2*	63,2*	58,4*	58,4*	56,0*	56,0*	53,6*	53,6*	50,5*	50,5*
	B		207,0[11]		203,0[2]	150,0	196,0[1]	140,0	183,0[1]	126,0	150,0[2]	112,0	126,0[1]	95,6	101,0[1]	77,7	77,7	68,9	68,9	60,5	60,5	52,3	52,3
44	-		42,5[10]		51,2[11]		56,8[11]	62,7	62,7	62,5*	62,5*	59,1*	59,1*	56,0*	56,0*	51,5*	51,5*	49,1*	49,1*	46,9*	46,9*	44,5*	44,5*
	B		186,0[10]		184,0[11]		180,0[2]	130,0	176,0[1]	117,0	148,0[2]	106,0	122,0[1]	91,7	101,0[1]	75,8	76,4[2]	67,4	67,4	59,6	59,6	51,8	51,8
48	-		32,3[10]		39,5[11]		43,8[11]		50,8[11]	56,0*	56,0*	52,8*	52,8*	49,8*	49,8*	45,5*	45,5*	43,2*	43,2*	41,2*	41,2*	38,9*	38,9*
	B		166,0[10]		168,0[11]		168,0[11]		161,0[2]	109,0	145,0[2]	99,1	122,0[2]	87,9	98,4[2]	73,5	76,8[2]	65,7	66,8[2]	58,5	58,6[2]	51,0	51,0
52	-		22,5[9]		29,8[11]		33,7[11]		39,2[11]	50,6*	50,6*	47,3*	47,3*	44,5*	44,5*	40,3*	40,3*	38,1*	38,1*	36,2*	36,2*	33,9*	33,9*
	B		147,0[9]		152,0[11]		152,0[11]		150,0[10]	102,0	141,0[2]	93,2	121,0[2]	83,9	99,0[2]	70,8	77,2[2]	63,8	66,7[2]	57,0	58,6[2]	50,0	50,5[2]
56	-		14,8[9]		21,1[11]		24,0[11]		30,0[11]	40,7	40,7	42,6*	42,6*	39,8*	39,8*	35,8*	35,8*	33,6*	33,6*	31,8*	31,8*	29,6*	29,6*
	B		131,0[9]		136,0[11]		137,0[11]		138,0[11]	96,0	130,0[3]	87,2	120,0[2]	79,2	98,3[2]	68,1	77,6[2]	61,4	66,5[2]	55,4	58,6[2]	48,8	50,3[2]
60	-				13,5[10]		16,3[11]		21,4[11]		30,8[11]	38,5*	38,5*	35,8*	35,8*	31,8*	31,8*	29,8*	29,8*	27,9*	27,9*	25,8*	25,8*
	B		115,0[9]		121,0[10]		123,0[11]		125,0[11]		120,0[9]	82,4	116,0[2]	75,0	97,6[2]	65,3	77,2[2]	59,2	66,4[2]	53,4	58,6[2]	47,4	50,0[2]
64	-								14,1[11]		22,2[11]	35,1*	35,1*	32,2*	32,2*	28,3*	28,3*	26,3*	26,3*	24,5*	24,5*	22,4*	22,4*
	B		103,0[9]		107,0[9]		110,0[10]		113,0[11]		114,0[11]	76,7	108,0[3]	70,4	96,9[2]	62,1	76,4[2]	56,9	65,2[2]	51,5	58,3[2]	45,8	49,8[2]
68	-								7,3[11]		15,4[11]	27,5	27,5	29,0*	29,0*	25,2*	25,2*	23,2*	23,2*	21,5*	21,5*	19,4*	19,4*
	B		91,5[7]		96,2[9]		98,1[10]		102,0[11]		105,0[11]	72,9	99,7[4]	66,1	93,5[3]	58,6	75,5[2]	54,1	64,0[3]	49,5	57,2[2]	44,0	49,1[2]
72	-												18,7[11]	26,2*	26,2*	22,4*	22,4*	20,4*	20,4*	18,7*	18,7*	16,7*	16,7*
	B		81,0[6]		85,4[8]		86,8[9]		91,2[10]		95,4[11]		92,7[9]	62,0	89,8[3]	55,1	74,8[3]	51,0	63,1[3]	47,1	56,8[3]	42,3	48,4[3]
76	-													23,8*	23,8*	19,9*	19,9*	17,9*	17,9*	16,3*	16,3*	14,3*	14,3*
	B		72,6[5]		76,4[8]		77,2[9]		80,4[9]		86,8[11]		87,4[11]	58,0	84,1[4]	51,5	74,4[3]	48,1	62,2[3]	44,6	56,0[3]	40,3	47,9[3]
80	-													17,7	17,7	17,7*	17,7*	15,7*	15,7*	14,0*	14,0*	12,1*	12,1*
	B		64,5[5]		67,9[7]		68,4[8]		71,9[9]		78,4[11]		81,5[11]	54,3	78,3[5]	48,3	71,4[4]	45,2	61,3[3]	42,0	55,2[3]	38,3	47,1[3]
84	-														9,5[11]	15,7*	15,7*	13,7*	13,7*	12,0*	12,0*	10,1*	10,1*
	B				60,4[6]		60,3[7]		63,5[8]		70,2[11]		75,5[11]		73,2[6]	45,2	69,8[4]	41,9	60,3[4]	39,5	54,4[3]	36,0	46,4[3]
88	-															14,0*	14,0*	11,9*	11,9*	10,2*	10,2*	8,2*	8,2*
	B				53,8[6]		53,3[7]		56,3[8]		61,7[10]		69,0[11]		68,5[9]	41,9	65,4[5]	39,0	58,9[4]	36,6	53,5[4]	33,6	45,7[3]
92	-															8,9	8,9	10,3*	10,3*	8,6*	8,6*	6,6*	6,6*
	B						46,8[6]		49,4[7]		54,7[10]		62,4[11]		64,4[9]	39,0	60,6[6]	36,1	58,1[5]	33,8	52,3[4]	31,2	45,0[4]
96	-																	9,1*	9,1*	7,2*	7,2*	5,1*	5,1*
	B								42,9[6]		47,7[9]		55,7[11]		60,6[11]		56,9[7]	33,5	54,4[6]	31,2	52,0[5]	28,8	44,1[4]
100	-																			5,9*	5,9*		
	B								37,7[6]		41,8[9]		48,6[10]		55,2[11]		53,6[8]	31,5	51,2[6]	28,7	49,0[6]	26,4	43,7[5]
104	-																						
	B										36,0[8]		42,8[10]		49,8[11]		50,4[10]		48,2[8]	26,8	46,8[6]	24,1	42,8[6]
108	-																						
	B										30,6[7]		37,0[9]		44,1[11]		47,6[11]		45,5[9]		44,1[7]	22,0	41,9[6]
112	-																						
	B										26,0[7]		32,0[9]		38,1[10]		43,1[11]		43,0[10]		41,4[8]	20,9	39,9[7]
116	-																						
	B												26,8[8]		33,2[10]		38,6[11]		39,7[11]		38,8[10]		37,3[8]
120	-																						
	B												22,2[7]		27,9[9]		33,9[11]		35,6[11]		36,8[11]		35,0[9]
124	-																						
	B												18,7[7]		23,6[9]		28,5[10]		31,3[11]		32,9[11]		32,6[10]
128	-																						
	B														19,5[8]		24,2[10]		26,9[11]		29,0[11]		30,0[11]
132	-																						
	B														16,1[7]		19,8[9]		22,3[10]		24,9[11]		26,5[11]
136	-																						
	B														13,2[7]		16,8[9]		18,7[10]		20,2[10]		22,9[11]
140	-																						
	B																13,6[8]		15,2[9]		17,3[10]		19,3[11]
144	-																						
	B																10,5[7]		12,0[8]		14,0[9]		15,6[10]
148	-																						
	B																8,0[7]		9,4[8]		11,3[9]		12,8[10]
152	-																						
	B																				8,3[8]		9,8[9]

1) 12°; 2) 17°; 3) 22°; 4) 27°; 5) 32°; 6) 37°; 7) 42°; 8) 47°; 9) 52°; 10) 57°; 11) 62°

Traglasten
Lifting capacities

HSDWB

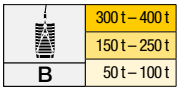

41

m	- / B	HS 96 W 18 87°/85	W 18 WVmax	W 24 87°/85	W 24 WVmax	W 30 87°/85	W 30 WVmax	W 36 87°/85	W 36 WVmax	W 48 87°/85	W 48 WVmax	W 60 87°/85	W 60 WVmax	W 72 87°/85	W 72 WVmax	W 84 87°/85	W 84 WVmax	W 90 87°/85	W 90 WVmax	W 96 87°/85	W 96 WVmax	W 102 87°/85	W 102 WVmax
14	-	228,0*	228,0*																				
	B	246,0*	246,0*																				
16	-	203,0*	205,0(1)	198,0*	198,0*	191,0*	191,0*																
	B	236,0*	248,0(1)	216,0*	220,0(1)	199,0*	199,0*																
18	-	183,0*	184,0(1)	178,0*	178,0(1)	172,0*	172,0*	168,0*	168,0*														
	B	246,0	248,0(1)	207,0*	220,0(1)	193,0*	197,0(1)	176,0*	176,0*														
20	-	166,0*	166,0*	162,0*	162,0*	156,0*	156,0*	153,0*	153,0*														
	B	237,0	247,0(1)	217,0	220,0(1)	186,0*	197,0(1)	171,0*	176,0(1)														
22	-	152,0*	152,0*	148,0*	148,0*	143,0*	143,0*	140,0*	140,0*	130,0*	130,0*												
	B	227,0	246,0(1)	210,0	219,0(1)	194,0	197,0(1)	178,0	178,0	139,0*	139,0*												
24	-	140,0*	140,0*	137,0*	137,0*	131,0*	131,0*	129,0*	129,0*	120,0*	120,0*	113,0*	113,0*										
	B	219,0	245,0(1)	202,0	218,0(1)	189,0	196,0(1)	173,0	176,0(1)	135,0*	140,0(1)	114,0*	114,0*										
26	-	120,0	126,0(11)	126,0*	126,0*	121,0*	121,0*	119,0*	119,0*	111,0*	111,0*	105,0*	105,0*	84,2*	84,2*								
	B	209,0	244,0(1)	194,0	218,0(1)	181,0	195,0(1)	168,0	175,0(1)	140,0	140,0(1)	111,0*	113,0(1)	91,5*	91,5*								
28	-	112,0	112,0	118,0*	118,0*	113,0*	113,0*	110,0*	110,0*	103,0*	103,0*	97,7*	97,7*	88,8*	88,8*								
	B	199,0	242,0(1)	185,0	217,0(1)	175,0	195,0(1)	162,0	175,0(1)	137,0	140,0(1)	107,0*	112,0(1)	89,3*	89,3*								
30	-		101,0(11)	110,0*	110,0*	105,0*	105,0*	103,0*	103,0*	95,4*	95,4*	91,0*	91,0*	84,9*	84,9*	70,6*	70,6*						
	B		236,0(1)	176,0	214,0(1)	167,0	194,0(1)	156,0	174,0(1)	133,0	139,0(1)	112,0	112,0(1)	87,2*	89,6(1)	70,6*	70,6*						
32	-		90,5(11)	94,7	98,2(11)	98,1*	98,1*	96,0*	96,0*	89,0*	89,0*	84,8*	84,8*	79,1*	79,1*	69,4*	69,4*	61,4*	61,4*	54,3*	54,3*		
	B		231,0(1)	169,0	208,0(2)	160,0	193,0(1)	151,0	174,0(1)	130,0	139,0(1)	110,0	112,0(1)	90,3	90,3	69,4*	70,3(1)	61,4*	61,4*	54,3*	54,3*		
34	-		80,1(11)	89,1	89,1	92,0*	92,0*	90,0*	90,0*	83,2*	83,2*	79,3*	79,3*	73,9*	73,9*	67,5*	67,5*	60,5*	60,5*	53,5*	53,5*	46,5*	46,5*
	B		225,0(1)	163,0	205,0(2)	153,0	191,0(1)	145,0	173,0(1)	126,0	139,0(1)	108,0	113,0(1)	89,2	89,7(1)	68,0*	70,3(1)	60,5*	61,4(1)	53,5*	53,5*	46,5*	46,5*
36	-		69,7(11)		80,0(11)	86,7*	86,7*	84,6*	84,6*	78,0*	78,0*	74,3*	74,3*	69,1*	69,1*	64,0*	64,0*	59,3*	59,3*	52,8*	52,8*	46,0*	46,0*
	B		220,0(1)		201,0(2)	147,0	189,0(1)	140,0	172,0(1)	122,0	139,0(1)	106,0	113,0(1)	87,7	89,8(1)	70,8	70,8	59,4*	61,5(1)	52,8*	53,6(1)	46,0*	46,0*
38	-		61,9(11)		71,9(11)	74,1	76,0(11)	79,7*	79,7*	73,3*	73,3*	69,8*	69,8*	64,7*	64,7*	59,9*	59,9*	57,2*	57,2*	52,1*	52,1*	45,5*	45,5*
	B		211,0(2)		198,0(2)	142,0	186,0(1)	134,0	171,0(1)	119,0	139,0(1)	104,0	113,0(1)	86,5	89,9(1)	70,1	70,5(1)	61,8	61,8	52,1*	53,7(1)	45,5*	46,1(1)
40	-		55,3(11)		63,8(11)	70,0	70,0	75,3*	75,3*	69,0*	69,0*	65,6*	65,6*	60,8*	60,8*	56,0*	56,0*	53,5*	53,5*	51,1*	51,1*	44,8*	44,8*
	B		201,0(3)		194,0(2)	138,0	184,0(1)	130,0	169,0(1)	115,0	138,0(1)	102,0	113,0(1)	85,1	90,0(1)	69,2	70,4(1)	61,3	61,6(1)	53,8	53,8(1)	46,3	46,3
44	-		41,9(11)		49,8(11)		54,9(11)	60,9	61,6(11)	61,4*	61,4*	58,3*	58,3*	53,8*	53,8*	49,3*	49,3*	46,9*	46,9*	44,8*	44,8*	42,3*	42,3*
	B		183,0(8)		180,0(3)		174,0(1)	121,0	166,0(1)	107,0	136,0(1)	96,5	112,0(1)	82,2	90,2(1)	67,3	70,2(1)	59,9	61,3(1)	53,1	53,5(1)	46,0	46,0(1)
48	-		31,1(10)		38,8(11)		41,4(11)		50,1(11)	55,1*	55,1*	52,1*	52,1*	47,8*	47,8*	43,5*	43,5*	41,2*	41,2*	39,1*	39,1*	36,8*	36,8*
	B		165,0(10)		165,0(8)		160,0(3)		158,0(2)	100,0	134,0(1)	91,0	110,0(2)	78,8	87,8(1)	65,4	70,0(1)	58,2	61,0(1)	51,5	53,1(1)	45,3	45,6(1)
52	-		21,7(10)		28,5(11)		31,9(11)		38,8(11)	49,7*	49,7*	46,8*	46,8*	42,6*	42,6*	38,5*	38,5*	36,3*	36,3*	34,3*	34,3*	32,1*	32,1*
	B		147,0(10)		151,0(11)		146,0(6)		145,0(3)	94,4	131,0(2)	85,4	109,0(2)	75,5	88,5(2)	63,3	68,7(2)	56,6	60,7(1)	50,4	52,7(1)	44,2	45,2(1)
56	-		13,8(9)		20,4(11)		22,3(11)		29,2(11)	39,5	39,5	42,1*	42,1*	38,1*	38,1*	34,1*	34,1*	31,9*	31,9*	30,1*	30,1*	27,9*	27,9*
	B		130,0(9)		136,0(11)		134,0(10)		133,0(5)	88,8	125,0(3)	80,5	107,0(2)	71,6	87,7(2)	60,9	69,2(2)	54,9	59,6(2)	49,1	51,9(2)	43,1	44,8(1)
60	-						14,6(11)		21,0(11)		30,5(11)	38,1*	38,1*	34,1*	34,1*	30,2*	30,2*	28,1*	28,1*	26,3*	26,3*	24,2*	24,2*
	B		115,0(8)		121,0(10)		122,0(11)		122,0(8)		117,0(3)	75,9	106,0(2)	67,6	86,4(2)	58,5	69,1(2)	52,8	59,8(2)	47,6	52,2(2)	41,9	44,5(2)
64	-						7,3(11)				22,1(11)	34,6*	34,6*	30,7*	30,7*	26,8*	26,8*	24,8*	24,8*	23,0*	23,0*	20,9*	20,9*
	B		103,0(8)		108,0(10)		109,0(11)		113,0(11)		109,0(5)	71,0	103,0(3)	63,7	85,1(2)	55,7	67,9(2)	50,8	59,1(2)	45,9	52,4(2)	40,5	44,3(2)
68	-										13,7(10)	26,8	26,8	27,6*	27,6*	23,8*	23,8*	21,8*	21,8*	20,0*	20,0*	18,0*	18,0*
	B		90,6(7)		95,5(9)		97,2(10)		102,0(11)		101,0(7)	67,1	97,9(4)	59,9	83,0(3)	52,5	66,7(2)	48,4	57,9(2)	44,0	51,4(2)	38,9	43,9(2)
72	-										7,2(10)		18,6(11)	24,8*	24,8*	21,1*	21,1*	19,1*	19,1*	17,4*	17,4*	15,3*	15,3*
	B		81,2(7)		85,5(9)		86,0(10)		91,0(10)		93,6(9)		91,5(5)	56,4	81,6(3)	49,3	65,8(3)	45,5	57,1(3)	41,9	50,9(3)	37,3	43,2(3)
76	-													22,5*	22,5*	18,6*	18,6*	16,6*	16,6*	15,0*	15,0*	13,0*	13,0*
	B		71,9(6)		76,0(8)		76,3(9)		81,3(10)		86,4(11)		85,1(6)	53,0	79,5(4)	46,3	64,8(3)	42,7	56,3(3)	39,5	50,2(3)	35,6	43,1(3)
80	-													16,1	16,1	16,5*	16,5*	14,5*	14,5*	12,8*	12,8*	10,8*	10,8*
	B		64,2(6)		67,7(8)		67,2(8)		71,7(9)		78,3(11)		79,1(7)	49,6	75,3(5)	43,6	63,3(3)	40,2	55,6(3)	37,1	49,5(3)	33,6	42,4(3)
84	-															14,5*	14,5*	12,5*	12,5*	10,8*	10,8*	8,9*	8,9*
	B		56,8(5)		60,2(7)		59,6(8)		63,7(9)		70,2(11)		74,1(9)		70,6(6)	40,9	62,3(4)	37,8	54,5(4)	34,9	48,7(3)	31,6	41,7(3)
88	-															12,9*	12,9*	10,8*	10,8*	9,1*	9,1*	7,1*	7,1*
	B				53,1(6)		52,2(7)		56,1(8)		62,4(11)		68,9(11)		66,4(7)	38,1	60,2(5)	35,1	54,0(4)	32,5	47,7(4)	29,6	41,0(3)
92	-															7,5	7,5	9,2*	9,2*	7,5*	7,5*	5,5*	5,5*
	B				47,2(6)		45,9(7)		49,4(8)		54,6(10)		62,4(11)		62,4(8)	35,4	57,4(5)	32,4	52,6(5)	30,0	47,2(4)	27,4	40,5(4)
96	-																	8,0*	8,0*	6,1*	6,1*		
	B						39,9(6)		43,0(7)		48,0(10)		55,9(11)		58,5(10)		54,9(6)	30,1	50,6(5)	27,5	45,9(5)	25,0	40,0(4)
100	-																						
	B								37,2(6)		41,6(9)		49,4(11)		54,2(11)		51,6(7)	28,4	49,6(6)	25,4	44,6(5)	22,8	39,1(5)
104	-																						
	B								32,2(6)		36,0(9)		42,9(10)		48,8(11)		48,2(8)		47,0(7)	23,6	44,1(6)	20,8	38,3(5)
108	-																						
	B										30,7(8)		37,4(10)		43,4(11)		45,8(10)		43,9(8)		42,3(7)	19,2	37,9(6)
112	-																						
	B										25,6(7)		31,9(9)		38,1(11)		42,2(11)		41,0(9)		39,6(8)	18,3	36,5(7)
116	-																						
	B										21,5(7)		27,1(9)		32,5(10)		37,7(11)		38,8(11)		37,5(9)		34,6(8)
120	-																						
	B												22,6(8)		27,7(10)		33,2(11)		34,7(11)		34,9(10)		32,9(8)
124	-																						
	B												18,4(7)		23,0(9)		28,5(11)		30,5(11)		32,1(11)		31,1(10)
128	-																						
	B												15,4(7)		19,3(9)		23,7(10)		26,2(11)		28,2(11)		29,2(11)
132	-																						
	B														15,8(8)		19,9(10)		21,9(11)		24,4(11)		25,6(11)
136	-																						
	B														12,6(7)		16,2(9)		18,1(10)		20,7(11)		22,1(11)
140	-																						
	B														9,9(7)		13,3(9)		14,6(9)		16,8(10)		18,8(11)
144	-																						
	B																10,3(8)		11,8(9)		13,9(10)		15,6(11)
148	-																						
	B																		6,8(5)		10,7(9)		12,4(10)
152	-																						
	B																				8,2(9)		

1) 12°; 2) 17°; 3) 22°; 4) 27°; 5) 32°; 6) 37°; 7) 42°; 8) 47°; 9) 52°; 10) 57°; 11) 62°

Traglasten
Lifting capacities

HSDWB

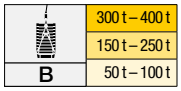

Vorläufig
Preliminary

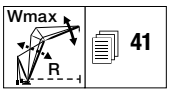

m		HS 102																					
		W 18		W 24		W 30		W 36		W 48		W 60		W 72		W 84		W 90		W 96		W 102	
		87*/85	WVmax	87*/85	WVmax	87*/85	WVmax	87*/85	WVmax	87*/85	WVmax	87*/85	WVmax	87*/85	WVmax	87*/85	WVmax	87*/85	WVmax	87*/85	WVmax	87*/85	WVmax
14	-	218,0*	218,0*																				
	B	220,0*	220,0*																				
16	-	196,0*	196,0*	191,0*	191,0*																		
	B	211,0*	220,0(1)	192,0*	192,0*																		
18	-	177,0*	177,0*	173,0*	174,0(1)	167,0*	167,0*	156,0*	156,0*														
	B	220,0	220,0(1)	185,0*	195,0(1)	171,0*	173,0(1)	156,0*	156,0*														
20	-	161,0*	161,0*	157,0*	162,0(1)	152,0*	152,0*	148,0*	148,0*														
	B	213,0	219,0(1)	194,0	195,0(1)	165,0*	174,0(1)	152,0*	155,0(1)														
22	-	148,0*	148,0*	144,0*	150,0(1)	139,0*	139,0*	136,0*	136,0*	122,0*	122,0*												
	B	205,0	218,0(1)	189,0	194,0(1)	173,0	174,0(1)	147,0*	155,0(1)	122,0*	122,0*												
24	-	136,0*	136,0*	133,0*	138,0(1)	128,0*	128,0*	125,0*	125,0*	115,0*	115,0*	99,9*	99,9*										
	B	197,0	218,0(1)	182,0	193,0(1)	168,0	173,0(1)	154,0	155,0(1)	118,0*	123,0(1)	99,9*	99,9*										
26	-	116,0	123,0(11)	123,0*	126,0(1)	118,0*	118,0*	116,0*	116,0*	106,0*	106,0*	97,4*	97,4*										
	B	189,0	217,0(1)	175,0	192,0(1)	163,0	173,0(1)	150,0	155,0(1)	124,0	124,0	97,4*	99,0(1)										
28	-	108,0	109,0(11)	115,0*	115,0*	110,0*	110,0*	108,0*	108,0*	98,6*	98,6*	93,9*	93,9*	78,1*	78,1*								
	B	181,0	216,0(1)	168,0	191,0(1)	157,0	172,0(1)	145,0	155,0(1)	120,0	123,0(1)	94,7*	98,9(1)	78,1*	78,1*								
30	-		98,1(11)	107,0*	107,0*	102,0*	102,0*	100,0*	100,0*	91,7*	91,7*	87,4*	87,4*	76,5*	76,5*	61,5*	61,5*						
	B		214,0(1)	160,0	191,0(1)	151,0	172,0(1)	141,0	154,0(1)	117,0	123,0(1)	99,0	99,0	76,5*	78,5(1)	61,5*	61,5*						
32	-		88,3(11)	91,6	96,4(11)	95,8*	95,8*	93,8*	93,8*	85,6*	85,6*	81,5*	81,5*	74,9*	74,9*	60,4*	60,4*	53,4*	53,4*				
	B		211,0(1)	154,0	189,0(1)	145,0	171,0(1)	136,0	154,0(1)	114,0	123,0(1)	97,1	98,9(1)	74,9*	78,6(1)	60,4*	61,2(1)	53,4*	53,4*	47,0*	47,0*		
34	-		78,5(11)	86,1	86,1	89,9*	89,9*	88,0*	88,0*	80,0*	80,0*	76,2*	76,2*	70,8*	70,8*	59,4*	59,4*	52,6*	52,6*	46,4*	46,4*	40,3*	40,3*
	B		208,0(1)	148,0	187,0(1)	139,0	170,0(1)	132,0	154,0(1)	112,0	122,0(1)	95,0	98,9(1)	78,4	78,6(1)	59,4*	61,4(1)	52,6*	53,4(1)	46,4*	46,4*	40,3*	40,3*
36	-		68,6(11)		78,2(11)	84,6*	84,6*	82,8*	82,8*	75,0*	75,0*	71,4*	71,4*	66,2*	66,2*	58,4*	58,4*	51,8*	51,8*	45,8*	45,8*	39,8*	39,8*
	B		206,0(1)		185,0(1)	134,0	168,0(1)	127,0	153,0(1)	109,0	122,0(1)	93,2	98,9(1)	77,5	78,6(1)	62,1	62,1	51,8*	53,6(1)	45,8*	46,6(1)	39,8*	39,8*
38	-		59,5(11)		70,4(11)	71,7	74,8(11)	78,0*	78,0*	70,4*	70,4*	67,1*	67,1*	62,0*	62,0*	57,1*	57,1*	51,0*	51,0*	45,1*	45,1*	39,2*	39,2*
	B		203,0(1)		184,0(1)	129,0	166,0(1)	122,0	151,0(1)	106,0	122,0(1)	91,4	98,9(1)	76,2	78,7(1)	61,4	61,7(1)	54,1	54,1	45,1*	46,8(1)	39,2*	40,0(1)
40	-		53,2(11)		62,7(11)	67,6	67,6	73,7*	73,7*	66,3*	66,3*	63,0*	63,0*	58,2*	58,2*	53,5*	53,5*	49,9*	49,9*	44,4*	44,4*	38,7*	38,7*
	B		195,0(2)		182,0(1)	125,0	164,0(1)	118,0	150,0(1)	103,0	122,0(1)	89,5	98,9(1)	74,8	78,7(1)	60,7	61,6(1)	53,5	53,8(1)	47,1	47,1	38,7*	40,1(1)
44	-		40,7(11)		48,0(11)		53,8(11)	59,1	60,8(11)	59,0*	59,0*	56,0*	56,0*	51,4*	51,4*	47,0*	47,0*	44,6*	44,6*	41,9*	41,9*	37,4*	37,4*
	B		178,0(8)		174,0(3)		161,0(1)	110,0	147,0(1)	96,3	120,0(1)	85,6	98,9(1)	72,1	78,7(1)	58,8	61,6(1)	52,3	53,6(1)	46,2	46,7(1)	40,0	40,1(1)
48	-		29,2(10)		37,5(11)		40,8(11)		49,1(11)	52,8*	52,8*	50,0*	50,0*	45,6*	45,6*	41,3*	41,3*	39,0*	39,0*	37,0*	37,0*	34,7*	34,7*
	B		162,0(10)		161,0(5)		155,0(3)		143,0(2)	90,0	118,0(1)	80,8	97,3(1)	69,4	78,8(1)	57,0	61,5(1)	50,8	53,4(1)	45,1	46,5(1)	39,2	39,8(1)
52	-		20,4(10)		27,1(11)		30,6(11)		38,2(11)	47,6*	47,6*	44,8*	44,8*	40,6*	40,6*	36,5*	36,5*	34,3*	34,3*	32,3*	32,3*	30,1*	30,1*
	B		146,0(10)		148,0(10)		144,0(5)		139,0(3)	84,5	116,0(1)	76,1	95,7(1)	66,6	77,0(2)	55,1	59,7(2)	49,2	53,2(1)	43,7	46,2(1)	38,1	39,4(1)
56	-				19,1(11)		21,5(11)		28,2(11)	37,1	37,1	40,3*	40,3*	36,3*	36,3*	32,2*	32,2*	30,1*	30,1*	28,2*	28,2*	26,0*	26,0*
	B		129,0(3)		135,0(11)		132,0(8)		131,0(5)	79,5	112,0(2)	71,6	94,1(2)	63,1	76,7(2)	53,1	60,1(2)	47,6	52,1(2)	42,4	45,9(1)	37,0	39,1(1)
60	-				11,5(11)				20,2(11)		28,8(11)	36,4*	36,4*	32,4*	32,4*	28,5*	28,5*	26,4*	26,4*	24,6*	24,6*	22,4*	22,4*
	B		115,0(9)		120,0(11)		121,0(11)		121,0(7)		108,0(3)	67,6	92,7(2)	59,6	75,4(2)	51,1	60,4(2)	45,9	52,4(2)	41,0	45,3(2)	35,9	38,6(2)
64	-										20,6(11)	33,0*	33,0*	29,0*	29,0*	25,2*	25,2*	23,1*	23,1*	21,4*	21,4*	19,3*	19,3*
	B		101,0(9)		107,0(10)		108,0(11)		111,0(10)		104,0(5)	63,1	89,9(3)	56,1	74,1(2)	48,6	59,3(2)	44,0	52,1(2)	39,4	45,5(2)	34,6	38,6(2)
68	-											24,8	24,8	26,0*	26,0*	22,3*	22,3*	20,2*	20,2*	18,5*	18,5*	16,4*	16,4*
	B		90,5(8)		95,3(10)		96,4(10)		101,0(11)		97,8(6)	59,8	86,8(4)	52,6	72,8(2)	45,6	58,2(2)	41,7	51,1(2)	37,8	44,8(2)	33,2	38,6(2)
72	-												17,3(11)	23,4*	23,4*	19,6*	19,6*	17,6*	17,6*	15,9*	15,9*	13,9*	13,9*
	B		79,9(7)		84,8(9)		85,9(10)		90,8(11)		90,9(8)		83,6(5)	49,5	71,3(3)	42,8	57,2(2)	39,2	50,3(3)	36,0	44,2(3)	31,7	37,7(2)
76	-												10,7(11)	21,1*	21,1*	17,3*	17,3*	15,3*	15,3*	13,6*	13,6*	11,6*	11,6*
	B		71,3(7)		75,3(9)		75,4(9)		80,9(10)		84,8(11)		80,6(6)	46,6	68,8(4)	40,2	56,2(3)	36,8	49,4(3)	33,7	43,5(3)	30,1	37,5(3)
80	-													14,4	14,4	15,1*	15,1*	13,1*	13,1*	11,5*	11,5*	9,5*	9,5*
	B		62,8(8)		66,9(8)		67,0(9)		71,7(10)		76,8(11)		77,3(7)	44,0	66,4(4)	37,7	55,2(3)	34,5	48,6(3)	31,6	42,8(3)	28,3	36,9(3)
84	-															13,3*	13,3*	11,2*	11,2*	9,6*	9,6*	7,6*	7,6*
	B		55,7(5)		59,2(8)		58,7(8)		63,3(9)		68,8(11)		71,7(9)		64,2(5)	35,5	53,8(4)	32,3	47,7(3)	29,5	42,1(3)	26,4	36,2(3)
88	-															11,6*	11,6*	9,5*	9,5*	7,9*	7,9*	5,9*	5,9*
	B		49,1(5)		52,5(7)		51,8(8)		55,8(9)		61,2(11)		67,5(11)		61,6(6)	33,2	52,3(4)	30,3	46,6(4)	27,6	41,3(3)	24,6	35,6(3)
92	-															6,0	6,0	8,0*	8,0*	6,3*	6,3*		
	B				45,8(6)		44,9(7)		48,8(8)		53,9(11)		61,2(11)		59,3(8)	31,1	50,7(5)	28,3	45,4(4)	25,7	40,4(4)	22,9	34,9(3)
96	-																	6,8*	6,8*				
	B				40,5(6)		39,1(7)		42,2(7)		46,9(10)		54,8(11)		56,5(9)		49,2(6)	25,9	44,4(5)	23,8	39,5(4)	21,2	34,3(4)
100	-																						
	B						33,5(6)		36,7(7)		40,7(10)		48,6(11)		52,9(11)		47,6(7)	24,6	42,8(6)	21,7	38,9(5)	19,5	33,5(4)
104	-																						
	B								31,2(6)		34,8(9)		42,4(11)		47,7(11)		45,9(8)		41,3(7)	20,2	37,2(6)	17,9	33,0(5)
108	-																						
	B								26,6(6)		29,5(9)		36,4(10)		42,4(11)		43,6(9)		40,0(8)		35,7(7)	16,5	31,7(6)
112	-																						
	B										24,6(8)		31,1(10)		37,2(11)		41,0(11)		39,0(9)		34,5(8)	15,6	30,7(6)
116	-																						
	B										19,9(7)		26,0(9)		31,9(11)		36,6(11)		36,7(10)		33,6(9)		29,8(7)
120	-																						
	B										16,7(7)		21,5(9)		26,8(10)		32,2(11)		33,5(11)		33,2(10)		29,0(8)
124	-																						
	B												17,7(8)		22,3(10)		27,7(11)		29,5(11)		31,0(11)		28,1(9)
128	-																						
	B												14,4(7)		18,3(9)		23,1(11)		25,4(11)		27,3(11)		27,4(11)
132	-																						
	B												11,5(7)		15,0(9)		19,0(10)		21,5(11)		23,5(11)		24,6(11)
136	-																						
	B														11,8(8)		15,7(10)		17,3(10)		20,0(11)		21,3(11)
140	-																						
	B														6,2(3)		12,4(9)		14,3(10)		16,6(11)		18,1(11)
144	-																						
	B																9,6(9)		11,0(9)		13,1(10)		15,0(11)
148	-																						
	B																		8,3(9)		10,3(10)		11,7(10)
152	-																						
	B																						8,9(10)

1) 12°; 2) 17°; 3) 22°; 4) 27°; 5) 32°; 6) 37°; 7) 42°; 8) 47°; 9) 52°; 10) 57°; 11) 62°

Traglasten
Lifting capacities

HSDWB

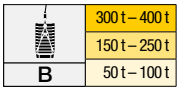

Vorläufig
Preliminary

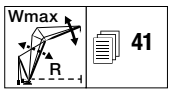

m		HS 108															
		W 18		W 24		W 30		W 36		W 48		W 60		W 72		W 84	
		87°/85	WVmax	87°/85	WVmax	87°/85	WVmax	87°/85	WVmax	87°/85	WVmax	87°/85	WVmax	87°/85	WVmax	87°/85	WVmax
14	-	195,0*	195,0*														
	B	195,0*	195,0*														
16	-	189,0*	189,0*	171,0*	171,0*												
	B	189,0*	195,0(1)	171,0*	171,0*												
18	-	172,0*	172,0*	165,0*	165,0*	152,0*	152,0*	138,0*	138,0*								
	B	196,0	196,0	166,0*	172,0(1)	152,0*	152,0*	138,0*	138,0*								
20	-	157,0*	157,0*	151,0*	151,0*	147,0*	147,0*	135,0*	135,0*								
	B	191,0	195,0(1)	173,0	173,0(1)	148,0*	154,0(1)	135,0*	137,0(1)								
22	-	144,0*	144,0*	139,0*	139,0*	135,0*	135,0*	130,0*	130,0*	109,0*	109,0*						
	B	184,0	194,0(1)	168,0	172,0(1)	155,0	155,0(1)	131,0*	137,0(1)	109,0*	109,0*						
24	-	133,0*	133,0*	128,0*	128,0*	125,0*	125,0*	121,0*	121,0*	106,0*	106,0*	87,7*	87,7*				
	B	178,0	193,0(1)	163,0	171,0(1)	150,0	154,0(1)	137,0	137,0(1)	106,0*	109,0(1)	87,7*	87,7*				
26	-	112,0	121,0(11)	119,0*	119,0*	115,0*	115,0*	112,0*	112,0*	103,0*	103,0*	85,7*	85,7*				
	B	171,0	192,0(1)	157,0	170,0(1)	145,0	153,0(1)	133,0	137,0(1)	103,0*	109,0(1)	85,7*	86,7(1)				
28	-	104,0	107,0(11)	111,0*	111,0*	107,0*	107,0*	104,0*	104,0*	96,5*	96,5*	83,7*	83,7*	68,2*	68,2*		
	B	165,0	191,0(1)	151,0	170,0(1)	141,0	153,0(1)	129,0	136,0(1)	107,0	108,0(1)	83,7*	86,6(1)	68,2*	68,2*		
30	-		95,7(11)	104,0*	104,0*	100,0*	100,0*	96,8*	96,8*	89,8*	89,8*	81,5*	81,5*	66,8*	66,8*	53,1*	53,1*
	B		190,0(1)	145,0	169,0(1)	136,0	152,0(1)	125,0	136,0(1)	105,0	108,0(1)	86,9	86,9	66,8*	68,2(1)	53,1*	53,1*
32	-		86,5(11)	87,6	93,7(11)	93,7*	93,7*	90,5*	90,5*	83,9*	83,9*	78,3*	78,3*	65,4*	65,4*	52,1*	52,1*
	B		187,0(1)	140,0	168,0(1)	132,0	151,0(1)	121,0	135,0(1)	102,0	108,0(1)	85,3	86,2(1)	65,4*	68,2(1)	52,1*	52,1*
34	-		77,2(11)	82,4	83,3(11)	87,9*	87,9*	84,9*	84,9*	78,5*	78,5*	73,2*	73,2*	64,1*	64,1*	51,1*	51,1*
	B		185,0(1)	135,0	166,0(1)	127,0	150,0(1)	118,0	135,0(1)	99,6	107,0(1)	83,7	86,1(1)	68,3	68,3	51,1*	52,7(1)
36	-		67,9(11)		75,4(11)	82,8*	82,8*	79,8*	79,8*	73,6*	73,6*	68,6*	68,6*	62,8*	62,8*	49,8*	49,8*
	B		182,0(1)		165,0(1)	122,0	149,0(1)	114,0	134,0(1)	97,3	107,0(1)	82,0	85,9(1)	67,4	68,1(1)	53,3	53,3
38	-		58,6(11)		68,0(11)	69,6	73,8(11)	75,2*	75,2*	69,2*	69,2*	64,4*	64,4*	59,4*	59,4*	48,8*	48,8*
	B		180,0(1)		164,0(1)	118,0	148,0(1)	111,0	133,0(1)	94,9	107,0(1)	80,2	85,7(1)	66,4	68,0(1)	52,8	52,9(1)
40	-		51,6(11)		60,6(11)	65,7	65,7	71,1*	71,1*	65,2*	65,2*	60,5*	60,5*	55,7*	55,7*	48,2*	48,2*
	B		178,0(1)		162,0(1)	113,0	147,0(1)	107,0	132,0(1)	92,4	107,0(1)	78,6	85,5(1)	65,2	67,9(1)	52,3	52,8(1)
44	-		39,8(11)		45,8(11)		53,0(11)	56,2	59,0(11)	58,1*	58,1*	53,7*	53,7*	49,2*	49,2*	44,7*	44,7*
	B		171,0(5)		157,0(2)		144,0(1)	99,6	130,0(1)	87,1	105,0(1)	75,2	85,2(1)	62,7	67,7(1)	50,7	52,6(1)
48	-		27,7(10)		35,5(11)		40,5(11)		47,2(11)	52,1*	52,1*	47,9*	47,9*	43,6*	43,6*	39,3*	39,3*
	B		160,0(10)		150,0(4)		140,0(2)		128,0(1)	81,7	104,0(1)	71,6	84,2(1)	60,3	67,5(1)	49,1	52,4(1)
52	-		19,5(10)		25,6(11)		29,8(11)		36,6(11)	46,9*	46,9*	42,8*	42,8*	38,7*	38,7*	34,6*	34,6*
	B		144,0(10)		143,0(8)		133,0(4)		124,0(3)	76,5	102,0(1)	67,7	83,1(1)	57,8	65,8(2)	47,3	52,2(1)
56	-		11,3(10)		13,2(6)		21,0(11)		26,2(11)	36,2	36,8(11)	38,5*	38,5*	34,5*	34,5*	30,5*	30,5*
	B		129,0(10)		132,0(11)		128,0(7)		119,0(4)	72,0	100,0(2)	63,8	82,0(1)	55,1	65,7(2)	45,5	50,9(2)
60	-								18,6(11)		28,6(11)	34,7*	34,7*	30,7*	30,7*	26,8*	26,8*
	B		115,0(9)		119,0(11)		120,0(11)		114,0(8)		97,6(3)	59,9	80,7(2)	52,4	64,9(2)	43,6	51,0(2)
64	-								10,9(11)		20,5(11)	31,4*	31,4*	27,4*	27,4*	23,6*	23,6*
	B		102,0(9)		106,0(10)		108,0(11)		109,0(9)		94,0(4)	56,0	79,4(2)	49,3	64,1(2)	41,6	50,4(2)
68	-											23,0	23,0	24,5*	24,5*	20,8*	20,8*
	B		90,0(8)		94,6(10)		96,6(11)		99,7(11)		89,1(5)	52,9	77,2(3)	46,1	63,2(2)	39,2	49,7(2)
72	-												16,0(11)	21,9*	21,9*	18,2*	18,2*
	B		80,0(8)		83,3(9)		85,9(10)		89,7(11)		85,7(7)		74,8(4)	43,3	61,8(2)	37,0	48,9(2)
76	-												9,6(11)	19,7*	19,7*	15,9*	15,9*
	B		70,7(7)		74,5(9)		76,0(10)		79,7(10)		82,9(10)		71,9(2)	40,8	60,4(3)	34,7	48,2(2)
80	-													12,8	12,8	13,8*	13,8*
	B		62,7(7)		65,5(8)		66,9(9)		71,0(10)		76,5(11)		68,2(6)	38,3	58,8(4)	32,3	47,4(3)
84	-															12,0*	12,0*
	B		55,3(6)		58,3(8)		59,0(9)		62,0(9)		68,9(11)		66,2(8)		57,0(5)	30,4	46,4(3)
88	-															10,4*	10,4*
	B		48,7(6)		50,9(7)		51,4(8)		54,9(9)		61,4(11)		62,9(10)		55,0(3)	28,4	45,2(4)
92	-																
	B		42,6(5)		45,1(7)		44,9(8)		47,5(8)		54,2(11)		58,9(11)		52,3(7)	26,6	43,8(3)
96	-																
	B				39,1(6)		38,8(7)		41,7(8)		46,8(10)		53,3(11)		50,2(9)		42,5(3)
100	-																
	B				34,0(6)		33,2(7)		35,4(7)		40,8(10)		47,7(11)		48,8(10)		41,0(4)
104	-																
	B						28,1(6)		30,5(7)		34,7(9)		41,7(11)		45,2(11)		39,0(8)
108	-																
	B								25,3(6)		29,6(9)		35,5(10)		41,0(11)		38,1(9)
112	-																
	B								21,3(6)		24,3(8)		30,4(10)		36,6(11)		36,5(11)
116	-																
	B										20,4(8)		25,1(9)		31,5(11)		33,8(11)
120	-																
	B										16,4(7)		21,1(9)		26,0(10)		30,6(11)
124	-																
	B										13,3(7)		16,9(8)		21,9(10)		27,0(11)
128	-																
	B												13,9(8)		17,5(9)		22,8(11)
132	-																
	B												10,7(7)		14,5(9)		18,3(10)
136	-																
	B												7,8(7)		11,2(8)		15,2(10)
140	-																
	B														8,4(8)		11,8(9)
144	-																
	B																9,0(9)

1) 12°; 2) 17°; 3) 22°; 4) 27°; 5) 32°; 6) 37°; 7) 42°; 8) 47°; 9) 52°; 10) 57°; 11) 62°

Hubhöhen
Lifting heights

HSDWB

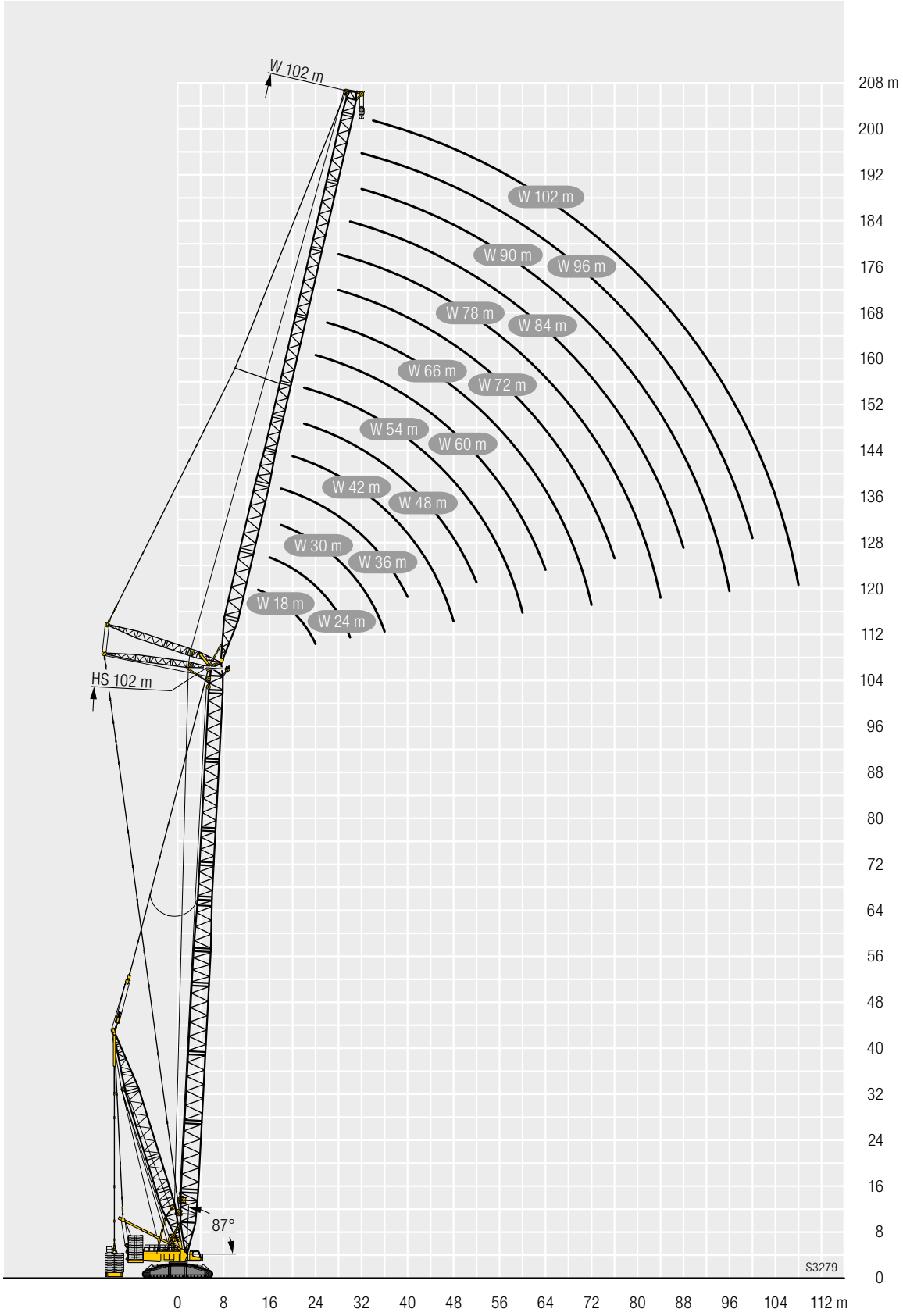

Beispiel
Example

Wmax

Vorläufig
Preliminary

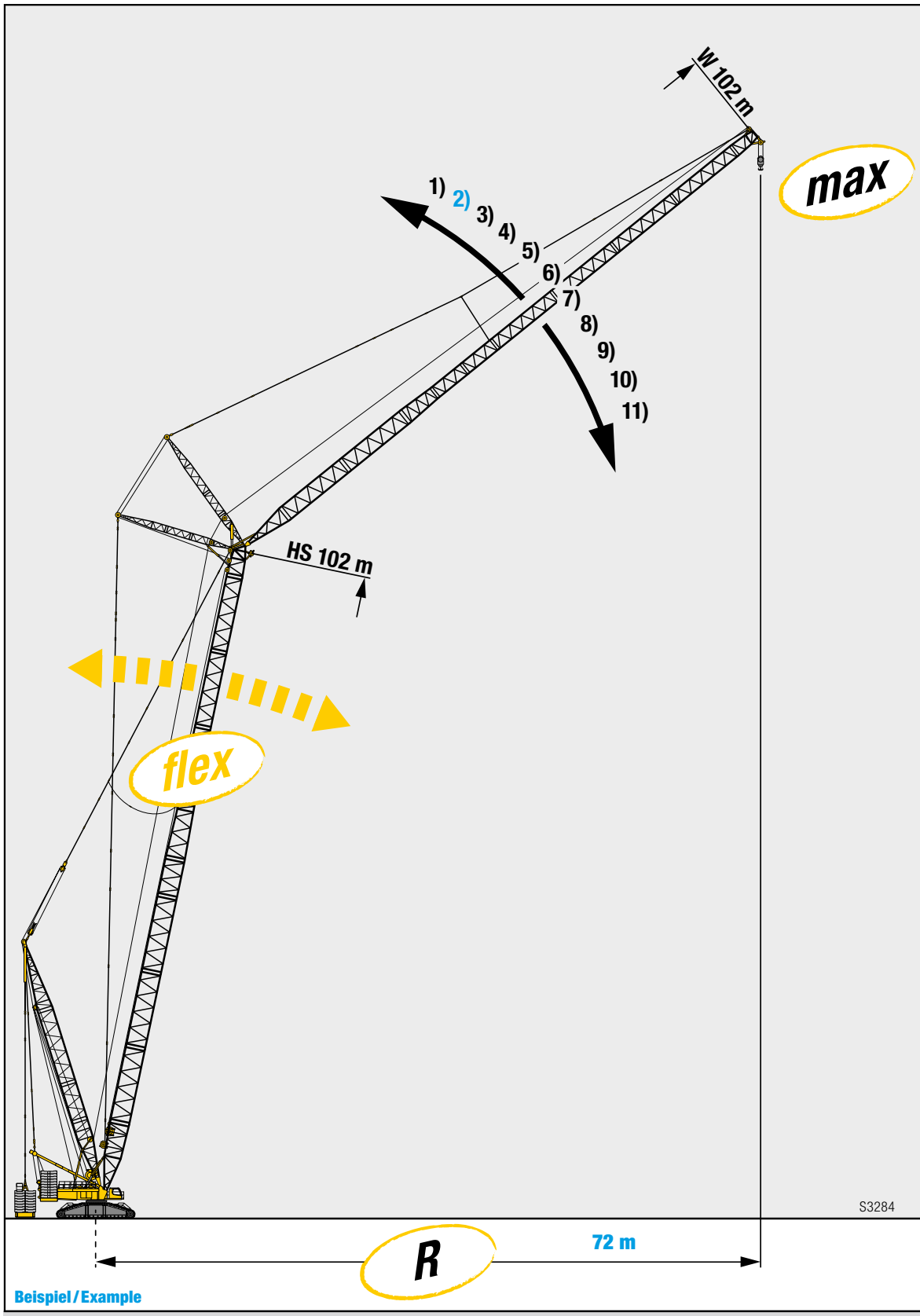

m		HS 102 W 102 87*/85	HS 102 W 102 Wmax
14	- / B		
16	- / B		
18	- / B		
20	- / B		
22	- / B		
24	- / B		
26	- / B		
28	- / B		
30	- / B		
32	- / B		
34	- / B	40,3* / 40,3*	40,3* / 40,3*
36	- / B	39,8* / 39,8*	39,8* / 39,8*
38	- / B	39,2* / 39,2*	39,2* / 40,0(1)
40	- / B	38,7* / 38,7*	38,7* / 40,1(1)
44	- / B	37,4* / 40,0	37,4* / 40,1(1)
48	- / B	34,7* / 39,2	34,7* / 39,8(1)
52	- / B	30,1* / 38,1	30,1* / 39,4(1)
56	- / B	26,0* / 37,0	26,0* / 39,1(1)
60	- / B	22,4* / 35,9	22,4* / 38,6(2)
64	- / B	19,3* / 34,6	19,3* / 38,6(2)
68	- / B	16,4* / 33,2	16,4* / 38,6(2)
72	- / B	13,9* / 31,7	13,9* / 37,7(2)
76	- / B	11,6* / 30,1	11,6* / 37,5(3)
80	- / B	9,5* / 28,3	9,5* / 36,9(3)
84	- / B	7,6* / 26,4	7,6* / 36,2(3)
88	- / B	5,9* / 24,6	5,9* / 35,6(3)
92	- / B	22,9	34,9(3)
96	- / B	21,2	34,3(4)
100	- / B	19,5	33,5(4)
104	- / B	17,9	33,0(5)
108	- / B	16,5	31,7(6)
112	- / B	15,6	30,7(6)
116	- / B		29,8(7)
120	- / B		29,0(8)
124	- / B		28,1(9)
128	- / B		27,4(11)
132	- / B		24,6(11)
136	- / B		21,3(11)
140	- / B		18,1(11)
144	- / B		15,0(11)
148	- / B		11,7(10)
152	- / B		8,9(10)

1) 12°; 2) 17°; 3) 22°; 4) 27°; 5) 32°; 6) 37°; 7) 42°; 8) 47°; 9) 52°; 10) 57°; 11) 62°

Symbolerklärung
Description of symbols

Allgemeine Symbole / General symbols

max	Max. Tragkraft Max. capacity		Seillänge Rope length
	Maximale Länge Hauptausleger Max. boom length	360°	Drehgeschwindigkeiten Slewing speeds
	Maximale Länge Auslegersystem Max. boom system length	km/h	Fahrgeschwindigkeit Driving speed
	Gegengewicht Counterweight	max	Traglast Load
	Zentralballast Central ballast		Hakenflasche / Traglast Hookblock / Capacity
	Breite Raupenfahrwerk Width crawler chassis		Rollen No. of sheaves
	Hubwerk Hoist gear		Stränge No. of lines
$V_{m/min}$	Geschwindigkeiten Working speeds		Gewicht Weight
F	Max. Seilzug Max. single line pull	m	Ausladung Radius
Ø	Seildurchmesser Rope diameter		Seite Page

Kranspezifische Symbole / Crane specific symbols

Hauptausleger SL
Main boom SL

Hauptausleger HSL
Main boom HSL

Hauptausleger S
Main boom S

Hauptausleger HS
Main boom HS

Derricksystem D
Derrick system D

Wippbare Gitterspitze W
Lattice type luffing fly jib W

Ballastpalette B
Counterweight frame B

Anmerkungen zu den Traglasttabellen

1. Die Traglasttabellen sind berechnet nach EN 13000.
2. Bei der Berechnung der Traglasttabellen ist mindestens eine Windgeschwindigkeit von 9 m/s und bezüglich der Last eine Windfläche von 1 m^2 pro Tonne Last und ein Windwiderstandsbeiwert der Last von 1,2 berücksichtigt. Beim Heben von Lasten mit großer Windangriffsfläche und/oder hohen Windwiderstandsbeiwerten muss die in den Traglasttabellen angegebene max. Windgeschwindigkeit reduziert werden.
3. Die Traglasten sind in Tonnen angegeben.
4. Das Gewicht des Lasthakens bzw. der Hakenflasche ist Teil der Last und ist daher von den Traglasten abzuziehen.
5. Die Ausladungen sind von der Drehmitte aus gemessen.
6. Die Aufstandsfläche muß eben und tragfähig sein.
7. Traglaständerungen vorbehalten.
8. Die Daten dieser Broschüre dienen zur allgemeinen Information. Sämtliche Angaben erfolgen ohne Gewähr. Anweisungen zur ordnungsgemäßen Inbetriebnahme des Krans entnehmen Sie bitte der Betriebsanleitung und dem Traglasttabellenbuch.

Remarks referring to load charts

1. The load charts are calculated according to EN 13000.
2. For the calculation of the load charts at least a wind speed of 9 m/s and regarding the load a sail area of 1 m^2 per ton load and a wind resistance coefficient of 1.2 on the load have been taken into account. For lifting of loads with large sail areas and/or high wind resistance coefficients the maximum wind speed as stated in the load charts has to be reduced.
3. Lifting capacities are given in metric tons.
4. The weight of the hook blocks and hooks is part of the load and therefore it must be deducted from the lifting capacities.
5. Working radii are measured from the slewing centre.
6. The subsoil must be even and of good bearing capacity.
7. Subject to modification of lifting capacities.
8. The data of this brochure serves only for general information. All information is provided without warranty. Instructions for the correct commissioning of the crane please take from the operation manual and the load chart book.

Änderungen vorbehalten / Subject to modification

Liebherr-Werk Ehingen GmbH
Postfach 1361, 89582 Ehingen, Germany
☎ +49 73 91 5 02-0, Fax +49 73 91 5 02-33 99
www.liebherr.com, E-mail: info.lwe@liebherr.com
www.facebook.com/LiebherrConstruction

Printed in Germany (1) lwe-td-272-00-de04-2019