KATO

ALLTERR
KA-1300 RX

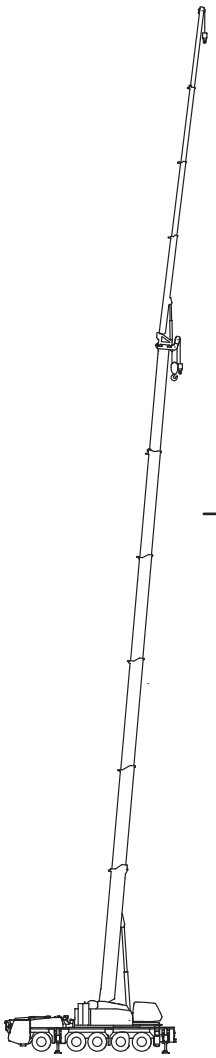

Boom (Operation of boom with heavy load unit) ····· 10

Boom (Operation of boom with SL jib stowed into leftside of boom) ····· 11

Boom (Operation of boom without SL jib) ····· 14

Super luffing jib (Operation of SL jib) ····· 17

Table of contents

SPECIFICATION ····· 3
Notes for the lifting capacity chart ····· 4
Working ranges for crane with heavy load unit ····· 6
Super luffing jib (SL Jib) WORKING RANGES (44.0m Boom+9.2 ～ 26.6m SL Jib) ····· 7
Super luffing jib (SL Jib) WORKING RANGES (48.0m Boom+9.2 ～ 26.6m SL Jib) ····· 8
Super luffing jib (SL Jib) WORKING RANGES (52.0m Boom+9.2 ～ 26.6m SL Jib) ····· 9
LIFTING CAPACITIES
- Boom (Operation of boom with heavy load unit) ····· 10
- Boom (Operation of boom with SL jib stowed into leftside of boom) ····· 11
- Boom (Operation of boom without SL jib) ····· 14
- Super luffing jib (Operation of SL jib) ····· 17

Overall view ····· 27
Public road driving conditions ····· 29
Minimum right-angle passage width for machine with Jib ····· 30
Dimensions and weight ····· 31

【SPECIFICATION】

■CRANE Specification

Description		KATO FULLY HYDRAULIC ALL TERRAIN CRANE
Model		KA-1300RX
Maximum lifting capacity		130ton×2.5m
Boom length		11.8m — 52.0m (6 section)
SL jib length		9.2m−26.6m (4 section)
Hoisting line speed (winch up)	Main winch	115m / min. (at 4th layer)
	Auxiliary winch	115m / min. (at 4th layer)
Hoisting hook speed (winch up)	Main winch	(Parts of line; 19) : 6m / min. (at 4th layer)
	Auxiliary winch	(Parts of line; 1) : 115m / min. (at 4th layer)
Boom derricking angle		-1.8° — 85°
Boom derricking time		70s / -1.8° — 85°
Boom extending speed		40.2m / 158s
Slewing speed	High	1.8min^{-1}
	Low	0.95min^{-1}
Speed / Time		Subject to no load

●Equipment and structure

Winch system Main & Auxiliary winches		Driven by axial plunger type hoisting motor through planetary gear reduction. Controlled independently by respective operating lever. Equipped with automatic brake.
Counterweight		8.5ton, 16ton, 24ton Hydraulic removal system
Outriggers	Type	Hydraulic H-beam type (2section)
	Extension width	8,400mm (Fully extended)
		7,400mm (Intermediately extended)
		6,400mm (Intermediately extended)
		5,400mm (Intermediately extended)
		4,400mm (Intermediately extended)
		3,400mm (Minimum extended)
Wire rope for hoisting	Main winch	Diameter: 20mm×Length: 280m
	Auxiliary winch	Diameter: 20mm×Length: 170m

●Engine

Maker		Mercedes-Benz
Model		OM906LA (Stage 3A)
Type		4 cycle, 6 cylinders, water cooled, direct injection turbo-charged diesel engine with intercooling
Piston displacement		6.37L
Max. power		150kW at 2200min^{-1}
Max. torque		750N·m at 1200min^{-1}
Electric system		24V
Batteries		115F51×2
Fuel tank capacity		250L

●Hydraulic system

Oil pump		Double variable axial plunger pump and 2 gear pumps
Hydraulic motor	Hoisting motor	Axial plunger type
	Slewing motor	Axial plunger type
Control valve		Double acting with integral check and relief valves
Cylinder		Double acting type
Oil reservoir capacity		1115L

●Safety devices

ACS (Automatic Crane System with voice alarm), Working range limit mode, Outrigger status detector, Boom derricking / telescoping holding valve, Overhoist prevention device, Drum lock device, Winch holding valve, Automatic winch brake, Winch drum rope tension roller, Outrigger lock pins, Slewing lock, Slewing brake, Hydraulic safety valves, Side mirror, Winch drum turning indication device, Engine oil pressure warning device, Battery charge warning device, Coolant temperature warning device, Coolant level warning device, Fuel level warning device, Hydraulic oil return filter warning device, Hydraulic oil temperature warning device, ACS outside indicator, Stanchion on boom, Slewing warning lamp

●Operator's cab

All steel welded construction, 1 person, Rubber mounted, Tiltable (approx.15°), Air conditioner, Accessory socket (24V), Front windscreen wiper & washer, Roof window wiper & washer, Access step light, AM/FM Radio, Floor mat, Power Window (external closing switch), Sun visor, Fire extinguisher

●Standard equipment

Boom dismount device, Slewing upper structure dismount device, Hydraulic oil cooler, Working light (on table and cab), Searchlight, Winch view camera, PA system, Anemometer, Side view camera, Hook for 130 / 70 ton, Hook for 50 ton, Hook for 7.8 ton

●Optional equipment

Tea table, Wire rope to dismount various things, Spark arrester, Slewing warning buzzer, Yellow rev. light

■CARRIER Specification

Maker		KATO
Model		KA5160

●Carrier Specification (Only carrier)

Maximum traveling speed		75km/h
Grade ability (tan θ)		0.60 (computed at G.V.W. = 36,620kg)
Minimum turning radius		10.4m

●General dimensions (Only carrier)

Overall length		13,230mm
Overall width		2,990mm
Overall height		2,750mm
Wheel base		2,750+1,650+1,850+1,650=7,900mm
Treads	Front	2,500mm
	Rear	2,500mm
Gross vehicle weight		36,620kg
Front axle		17,360kg (1st and 2nd Axles)
Rear axle		19,260kg (3rd, 4th and 5th Axles)

●General dimensions (Fully equipped)

Overall length		14,565mm
Overall width		2,990mm
Overall height		4,000mm

●Engine

Maker		Mercedes-Benz
Model		OM502LA (on Highway EURO 3)
Type		4 cycle, 8 cylinders, water cooled, direct Injection turbo-charged diesel engine with intercooling
Piston displacement		15.927L
Max. power		390kW at 1,800min^{-1}
Max. torque		2,400N·m at 1,080min^{-1}
Torque converter		Engine mounted 3 elements 1 stage (with lock up clutch)
Transmission		Remote mounted full automatic 5 forward & 1 reverse speed
Axles		All axles steered 1st, 2nd, 4th and 5th axles driven and have planetary gears reduction and differential lock Inter-axle differential lock on 4th axle
Suspension		Hydro-pneumatic suspension Hydraulic locking device with suspension cylinder
Brake system	Service brake	2 circuit brake 10 wheels servo-air brake, all axles are equipped with disc brakes
	Parking brake	Spring applied, electrically air released parking brake (2nd, 3rd, 4th and 5th Axles)
	Auxiliary brake	Engine brake (Compression brake), Exhaust brake, Hydraulic retarder
Steering		Semi-integral hydraulic power steering of front two axles and automatic steering of the 3rd, 4th and 5th axles
Tire size		10 tires, 445 / 95 R25 177E ROAD
Electric system		24V
Batteries		145G51×2
Fuel tank capacity		500L
Driver's cab		All steel welded construction, 2 persons

●Safety devices

Emergency steering device, Engine over speed alarm, Three-point seat belt (Driver), Suspension lock, Electric adjustable side mirrors, Warning reflector, Engine management & warning system, Transmission management & warning system, Radiator coolant level warning device, Low air warning device, Brake light / parking light disconnection warning device, Rear view camera, Brake wear indicator

●Standard equipment

Adjustable steering wheel, Air conditioner, Power Window, Adjustable suspension seat, Tachograph, Sun visor, Centralized lubricating system, Air dryer, AM/FM Radio, Towing hook (front and rear, eye type), Discharge head lamp

●Optional equipments

Air heater

7210010101
7210010201

■Notes for the lifting capacity chart

1. The lifting capacity chart indicates the maximum load which can be lifted by this crane provided it is level and standing on firm level ground. The values in the chart include the mass of the main hook and slings for boom operation, and auxiliary hook and slings for SL jib operation.
   The values enclosed with thick lines in the lifting capacity chart are determined by the structural strength of the crane, and the values below the enclosed areas are determined by the crane's stability.
2. The lifting capacity is classified into the following lifting performance groups depending on the outrigger extension width and the counterweight mounting state.

Operation of Boom with heavy load unit

Outrigger extension width	Counterweight mounting state	
	24ton counterweight mounted to crane	16ton counterweight mounted to crane
8.4m	BB1	BB1

Operation of boom with SL jib stowed into leftside of boom

Outrigger extension width	Counterweight mounting state				
	24ton counterweight mounted to crane	16ton counterweight mounted to crane	8.5ton counterweight mounted to crane	24ton or 16ton counterweight stowed in carrier	8.5ton counterweight stowed in carrier or without counterweight
8.4m	A1	B1	C1	D1	E1
7.4m	A2	B2	C2	D2	E2
6.4m	A3	B3	C3	D3	E3
5.4m	A4	B4	C4	D4	E4
4.4m	A5	B5	C5	D5	E5
3.4m		B6	C6	D6	E6

Operation of boom without SL jib

Outrigger extension width	Counterweight mounting state				
	24ton counterweight mounted to crane	16ton counterweight mounted to crane	8.5ton counterweight mounted to crane	24ton or 16ton counterweight stowed in carrier	8.5ton counterweight stowed in carrier or without counterweight
8.4m	NA1	NB1	NC1	ND1	NE1
7.4m	NA2	NB2	NC2	ND2	NE2
6.4m	NA3	NB3	NC3	ND3	NE3
5.4m	NA4	NB4	NC4	ND4	NE4
4.4m	NA5	NB5	NC5	ND5	NE5
3.4m		NB6	NC6	ND6	NE6

Operation of SL jib

Outrigger extension width	Counterweight mounting state				
	24ton counterweight mounted to crane	16ton counterweight mounted to crane	8.5ton counterweight mounted to crane	24ton or 16ton counterweight stowed in carrier	8.5ton counterweight stowed in carrier or without counterweight
8.4m	SA1	SB1	SC1	SD1	SE1
7.4m	SA2	SB2	SC2	SD2	SE2
6.4m	SA3	SB3	SC3	SD3	
5.4m	SA4	SB4	SC4	SD4	
4.4m	SA5	SB5	SC5		

3. The working radii are the actual values allowing for boom and SL jib deflection. Therefore you must always operate the crane on the basis of working radius.

4. The SL jib working radius is the value for crane operation by mounting the SL jib to the 44.0, 48.0 or 52.0 m boom. For jib operation with any other boom length, use the boom angle as standard instead of working radius.

5. If the boom length, boom angle, working radius, SL jib length or SL jib angle exceeds the specified value, conduct the operation according to the smaller value of lifting capacity for the relevant specified value and that for the next specified value.

6. The critical boom angle in each operation is shown in the lifting capacity chart.
   Since a smaller angle than the critical boom angle may cause to tip over even with no load, take care sufficiently.

7. When operating the boom with the SL jib mounted, substract mass of all attached hook, slings, etc. and 7.6 ton from the lifting capacity for boom. In this condition, maximum lifting load shall be 50t.
   Fix offset angle at 15° or less. Do not use the rooster sheave.

8. When operating the rooster sheave, substract mass of all attached hook, slings etc. from the lifting capacity for boom. In this condition, maximum lifting load shall be 7.8 ton.
   [The hook for use with the rooster sheave is the 7.8 ton hook (mass: 250 kg) with one part of line.]

9. Use the heavy load unit (130 ton hook with sheave bracket) when operating the crane loading with more than 70 ton.

10. In whatever working conditions the corresponding boom critical angle is shown in the chart. The crane can tip over if the boom is lowered below the critical angle even if unloaded. Therefore, never lower the boom below these angles.

11. The standard number of parts of line for each boom length are indicated in the lifting capacity chart. If you work with a non-standard number of parts of line, take 76.4 kN (7.8 tf) as the maximum load on any part of the wire rope.

12. High-speed winch operation should only be performed to allow descent of the hook alone. Avoid sudden lever operation.

13. Crane operation is permissible up to a wind speed of 10 m/s. Even in relatively light wind conditions, extra care should be taken when handling loads presenting large wind catching areas.

14. The machine will tip over or be damaged if operated with a load exceeding that specified in the lifting capacity chart or not handled correctly. If such trouble occurs, the machine will not be guaranteed.

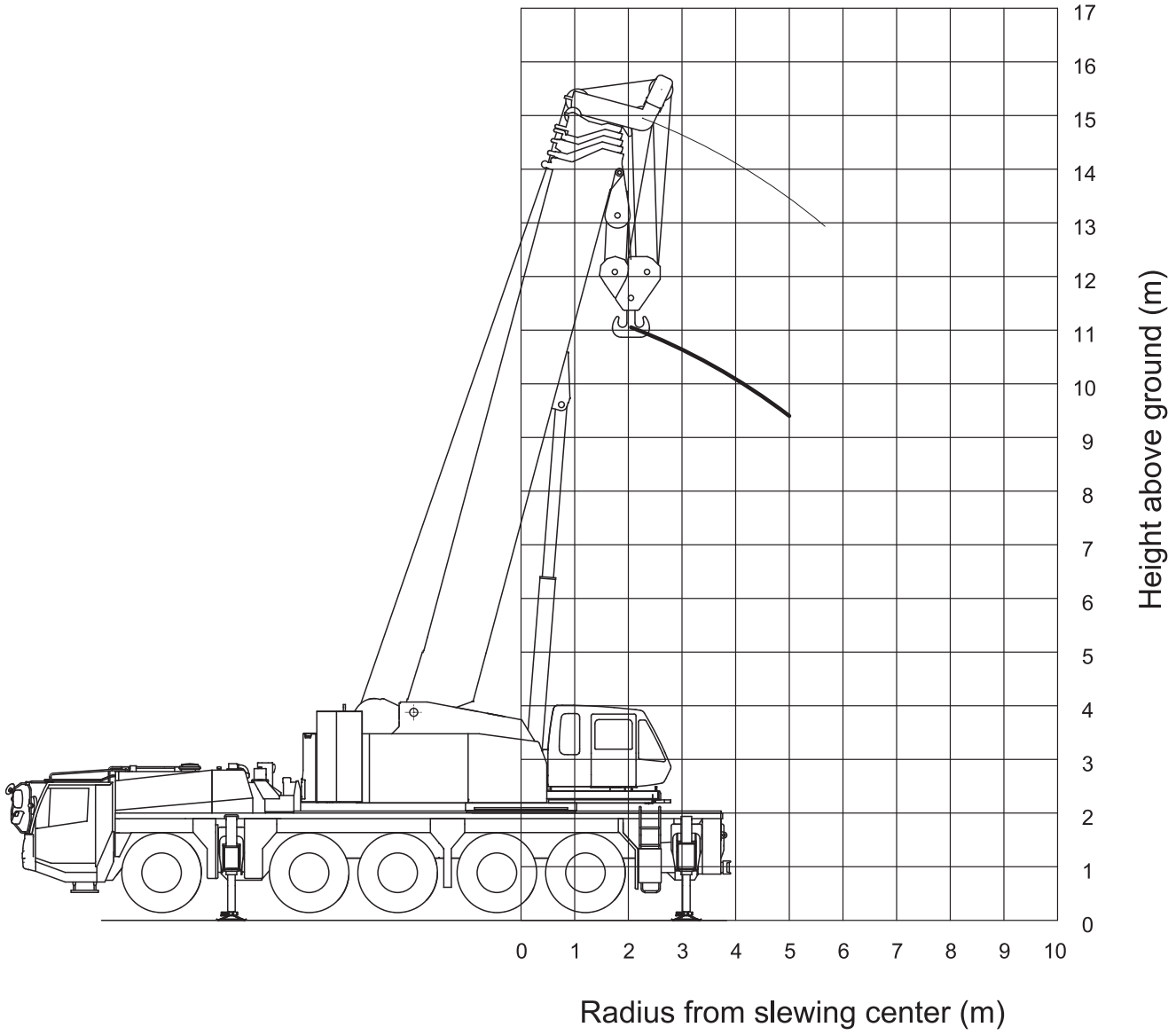

Note: This diagram does not include deflection of Boom.

Super luffing jib (SL Jib) WORKING RANGES (44.0m Boom+9.2 ~ 26.6m SL Jib)

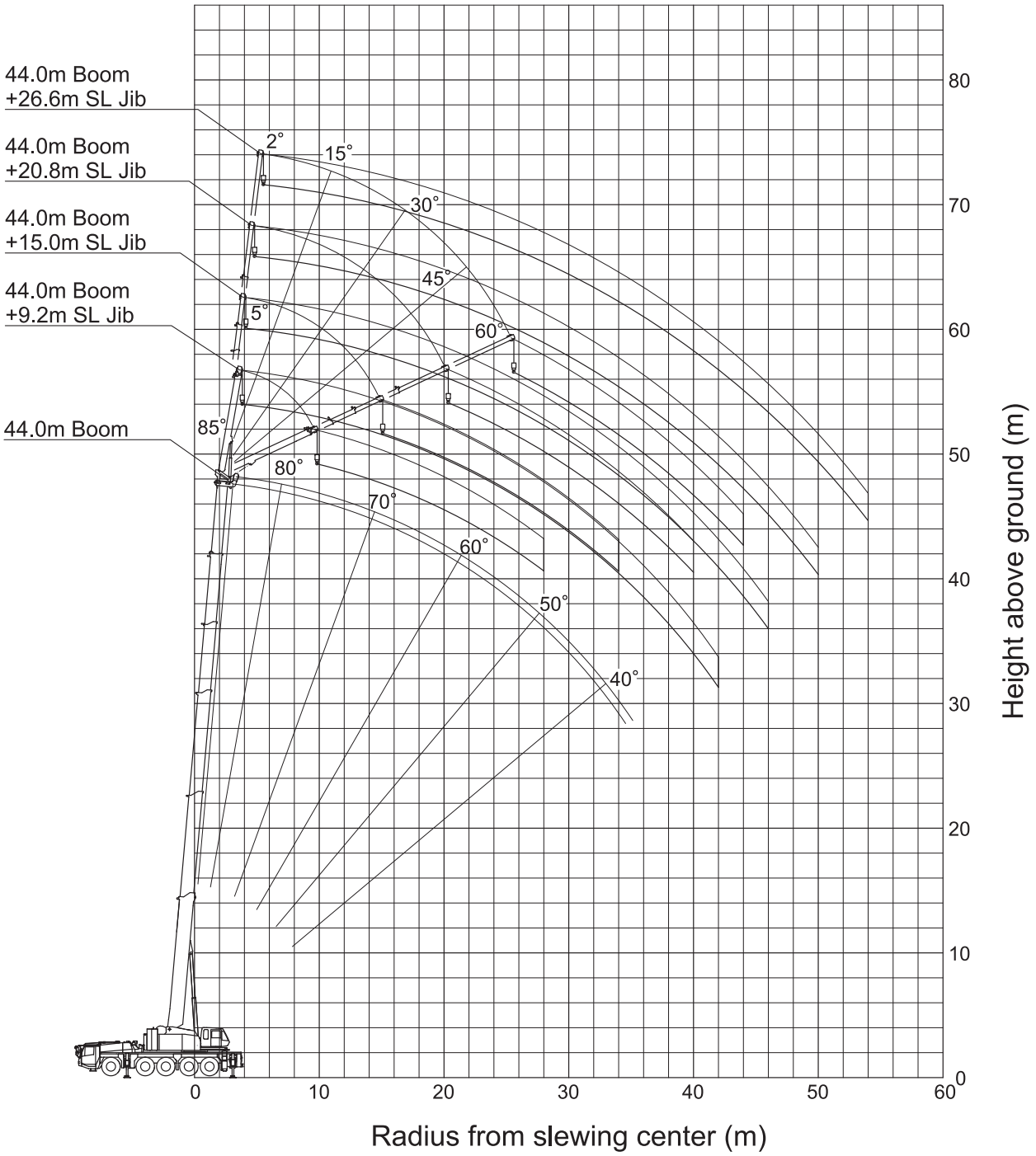

Notes:
1. This diagram does not include deflection of Boom and SL Jib.
2. The diagram is for Specification A1.

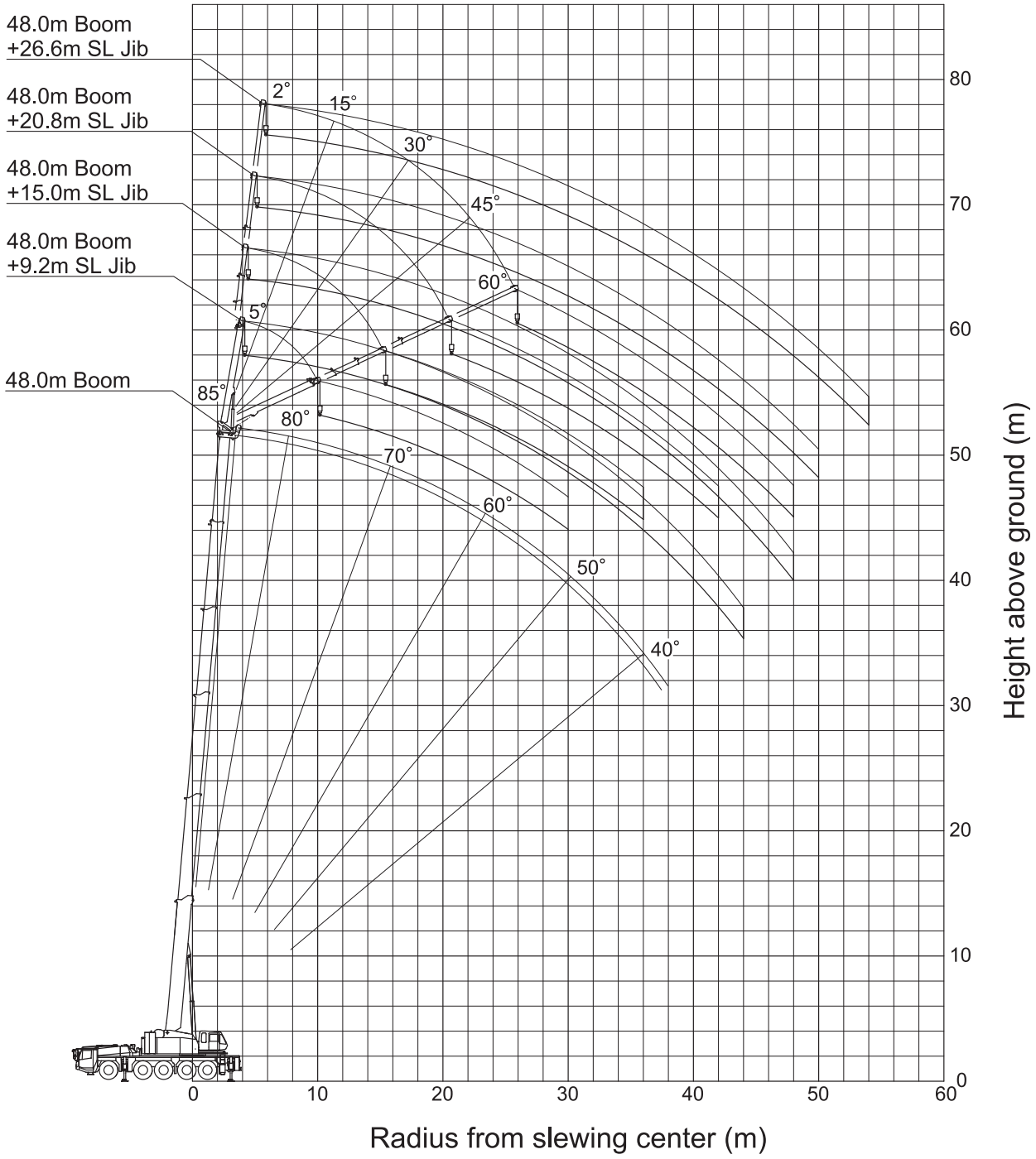

Notes:
1. This diagram does not include deflection of Boom and SL Jib.
2. The diagram is for Specification A1.

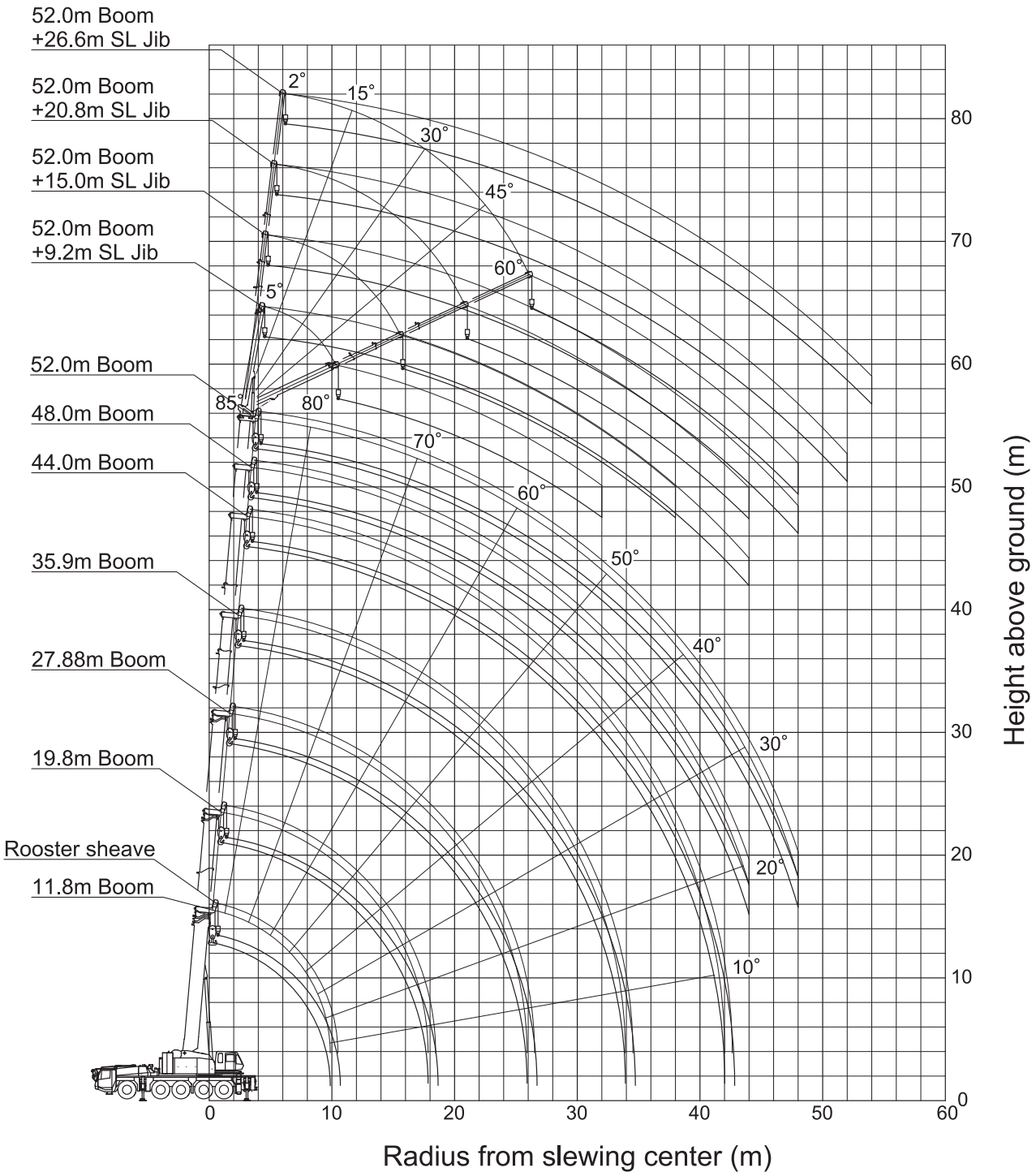

Notes:
1. This diagram does not include deflection of Boom and SL Jib.
2. The diagram is for Specification A1.

Outriggers fully extended (8.4m) 360° full range	
Specification BB1	
24ton or 16ton counterweight mounted to crane	
Working radius (m)	11.8m Boom Heavy Load Unit
2.5	130.0
3.0	120.0
3.5	110.0
4.0	101.0
4.5	89.0
5.0	79.5
Critical boom angle (°)	—
Standard hook	for 130 ton
Hook mass	1300kg
Parts of line	19

(Unit: Metric ton)

Boom (Operation of boom with SL jib stowed into leftside of boom)

Specification A1	Outriggers fully extended (8.4m) 360° full range, with 24ton counterweight mounted to crane						
Working radius (m)	11.8m Boom	19.8m Boom	27.88m Boom	35.9m Boom	44.0m Boom	48.0m Boom	52.0m Boom
2.5	70.0						
3.0	70.0	50.0					
3.5	70.0	50.0					
4.0	70.0	50.0	35.0				
4.5	70.0	50.0	35.0				
5.0	70.0	50.0	35.0	24.0			
6.0	65.7	50.0	35.0	24.0			
7.0	57.4	50.0	35.0	24.0	17.0	14.0	
8.0	49.0	49.0	35.0	24.0	17.0	14.0	12.0
9.0	42.5	42.5	35.0	24.0	17.0	14.0	12.0
10.0		37.2	33.7	24.0	17.0	14.0	12.0
12.0		29.4	27.8	23.2	17.0	14.0	12.0
14.0		23.7	23.4	20.7	15.8	14.0	12.0
16.0		19.3	19.4	18.4	14.0	14.0	12.0
18.0			15.6	16.3	12.6	13.1	12.0
20.0			12.7	14.2	11.5	11.7	11.0
22.0			10.2	12.0	10.5	10.4	9.8
24.0			8.3	10.0	9.6	9.3	8.8
26.0				8.4	8.9	8.4	7.9
28.0				7.0	8.1	7.6	7.1
30.0				5.8	6.9	6.9	6.5
32.0				4.8	5.9	6.3	5.9
34.0					5.0	5.4	5.3
36.0					4.2	4.6	4.9
38.0					3.5	3.9	4.2
40.0					2.9	3.3	3.6
42.0					1.4	2.8	3.1
44.0						2.3	2.6
46.0							2.1
48.0							1.7
Critical boom angle (°)	—	—	—	—	—	*11*	*16*
Standard hook	for 70 ton	for 50 ton					
Hook mass	900kg	600kg					
Parts of line	10	7	5	4			

(Unit: Metric ton)

Specification B1	Outriggers fully extended (8.4m) 360° full range, with 16ton counterweight mounted to crane						
Working radius (m)	11.8m Boom	19.8m Boom	27.88m Boom	35.9m Boom	44.0m Boom	48.0m Boom	52.0m Boom
2.5	70.0						
3.0	70.0	50.0					
3.5	70.0	50.0					
4.0	70.0	50.0	35.0				
4.5	70.0	50.0	35.0				
5.0	70.0	50.0	35.0	24.0			
6.0	64.5	50.0	35.0	24.0			
7.0	54.0	50.0	35.0	24.0	17.0	14.0	
8.0	46.0	46.0	35.0	24.0	17.0	14.0	12.0
9.0	40.0	40.0	35.0	24.0	17.0	14.0	12.0
10.0		35.5	33.7	24.0	17.0	14.0	12.0
12.0		27.6	27.6	23.2	17.0	14.0	12.0
14.0		21.0	20.9	20.7	15.8	14.0	12.0
16.0		16.4	16.3	18.0	14.0	14.0	12.0
18.0			13.0	14.6	12.6	13.1	12.0
20.0			10.3	12.0	11.5	11.7	11.0
22.0			8.1	9.9	10.5	10.4	9.8
24.0			6.4	8.1	9.2	9.3	8.8
26.0				6.7	7.7	8.1	7.9
28.0				5.4	6.5	6.8	7.1
30.0				4.4	5.4	5.8	6.1
32.0				3.5	4.5	4.9	5.2
34.0					3.7	4.1	4.4
36.0					3.1	3.4	3.7
38.0					2.5	2.8	3.1
40.0					1.9	2.3	2.5
42.0					1.4	1.8	2.1
44.0						1.3	1.6
46.0							1.1
Critical boom angle (°)	—	—	—	—	—	*16*	*22*
Standard hook	for 70 ton	for 50 ton					
Hook mass	900kg	600kg					
Parts of line	10	7	5	4			

(Unit: Metric ton)

Boom (Operation of boom with SL jib stowed into leftside of boom)

Specification C1	Outriggers fully extended (8.4m) 360° full range, with 8.5ton counterweight mounted to crane						
Working radius (m)	11.8m Boom	19.8m Boom	27.88m Boom	35.9m Boom	44.0m Boom	48.0m Boom	52.0m Boom
2.5	70.0						
3.0	70.0	50.0					
3.5	70.0	50.0					
4.0	70.0	50.0	35.0				
4.5	70.0	50.0	35.0				
5.0	70.0	50.0	35.0	24.0			
6.0	61.7	50.0	35.0	24.0			
7.0	51.6	50.0	35.0	24.0	17.0	14.0	
8.0	43.9	43.9	35.0	24.0	17.0	14.0	12.0
9.0	37.9	38.0	35.0	24.0	17.0	14.0	12.0
10.0		33.0	33.0	24.0	17.0	14.0	12.0
12.0		23.6	23.5	23.2	17.0	14.0	12.0
14.0		17.6	17.6	19.2	15.8	14.0	12.0
16.0		13.5	13.5	15.1	14.0	14.0	12.0
18.0			10.3	12.0	12.6	13.1	12.0
20.0			7.9	9.6	10.6	11.0	11.0
22.0			6.0	7.7	8.7	9.1	9.6
24.0			4.4	6.1	7.1	7.5	8.0
26.0				4.7	5.7	6.1	6.7
28.0				3.5	4.6	5.0	5.4
30.0				2.6	3.6	4.0	4.4
32.0				1.7	2.8	3.1	3.6
34.0					2.0	2.4	2.8
36.0					1.4	1.8	2.2
38.0						1.2	1.6
40.0							1.1
Critical boom angle (°)	—	—	—	—	*32*	*35*	*38*
Standard hook	for 70 ton	for 50 ton					
Hook mass	900kg	600kg					
Parts of line	10	7	5	4			

(Unit: Metric ton)

Specification D1	Outriggers fully extended (8.4m) 360° full range, with 24ton or 16ton counterweight stowed in carrier						
Working radius (m)	11.8m Boom	19.8m Boom	27.88m Boom	35.9m Boom	44.0m Boom	48.0m Boom	52.0m Boom
2.5	70.0						
3.0	70.0	50.0					
3.5	70.0	50.0					
4.0	70.0	50.0	35.0				
4.5	70.0	50.0	35.0				
5.0	70.0	50.0	35.0	24.0			
6.0	60.2	50.0	35.0	24.0			
7.0	50.2	46.5	35.0	24.0	17.0	14.0	
8.0	42.8	39.5	35.0	24.0	17.0	14.0	12.0
9.0	37.0	34.1	33.9	24.0	17.0	14.0	12.0
10.0		29.7	29.5	24.0	17.0	14.0	12.0
12.0		22.3	22.2	23.2	17.0	14.0	12.0
14.0		15.5	15.4	17.5	15.8	14.0	12.0
16.0		11.1	11.1	13.0	14.0	14.0	12.0
18.0			8.1	9.9	11.0	11.3	11.6
20.0			5.7	7.6	8.6	9.0	9.3
22.0			3.8	5.8	6.9	7.2	7.5
24.0			2.4	4.3	5.4	5.8	6.1
26.0				3.0	4.1	4.5	4.8
28.0				2.0	3.1	3.5	3.8
30.0				1.2	2.3	2.6	2.9
32.0					1.5	1.9	2.2
34.0						1.3	1.6
Critical boom angle (°)	—	—	—	*28*	*39*	*43*	*47*
Standard hook	for 70 ton	for 50 ton					
Hook mass	900kg	600kg					
Parts of line	10	7	5	4			

(Unit: Metric ton)

Boom (Operation of boom with SL jib stowed into leftside of boom)

Specification E1	Outriggers fully extended (8.4m) 360° full range, with 8.5ton counterweight stowed in carrier or without counterweight						
Working radius (m)	11.8m Boom	19.8m Boom	27.88m Boom	35.9m Boom	44.0m Boom	48.0m Boom	52.0m Boom
2.5	70.0						
3.0	70.0	50.0					
3.5	70.0	50.0					
4.0	70.0	50.0	35.0				
4.5	70.0	50.0	35.0				
5.0	70.0	50.0	35.0	24.0			
6.0	60.2	50.0	35.0	24.0			
7.0	50.2	46.5	35.0	24.0	17.0	14.0	
8.0	40.0	39.5	35.0	24.0	17.0	14.0	12.0
9.0	31.8	31.6	31.6	24.0	17.0	14.0	12.0
10.0		25.8	25.8	24.0	17.0	14.0	12.0
12.0		18.1	18.1	19.9	17.0	14.0	12.0
14.0		13.3	13.2	14.9	15.8	14.0	12.0
16.0		9.6	9.5	11.4	12.5	12.8	12.0
18.0			6.7	8.5	9.6	10.0	10.3
20.0			4.7	6.4	7.5	7.8	8.1
22.0			2.9	4.8	5.8	6.2	6.5
24.0			1.3	3.5	4.5	4.9	5.2
26.0				2.2	3.5	3.8	4.1
28.0				1.2	2.5	2.9	3.2
30.0					1.5	2.0	2.3
32.0							1.6
Critical boom angle (°)	—	—	—	*35*	*45*	*49*	*52*
Standard hook	for 70 ton	for 50 ton					
Hook mass	900kg	600kg					
Parts of line	10	7	5	4			

(Unit: Metric ton)

Boom (Operation of boom without SL jib)

Specification NA1	Outriggers fully extended (8.4m) 360° full range, with 24ton counterweight mounted to crane						
Working radius (m)	11.8m Boom	19.8m Boom	27.88m Boom	35.9m Boom	44.0m Boom	48.0m Boom	52.0m Boom
2.5	70.0						
3.0	70.0	50.0					
3.5	70.0	50.0					
4.0	70.0	50.0	35.0				
4.5	70.0	50.0	35.0				
5.0	70.0	50.0	35.0	24.0			
6.0	67.3	50.0	35.0	24.0			
7.0	58.9	50.0	35.0	24.0	17.0	14.0	
8.0	50.6	49.7	35.0	24.0	17.0	14.0	12.0
9.0	44.1	43.2	35.0	24.0	17.0	14.0	12.0
10.0		38.0	33.7	24.0	17.0	14.0	12.0
12.0		30.2	27.8	23.2	17.0	14.0	12.0
14.0		24.6	23.4	20.7	15.8	14.0	12.0
16.0		19.6	19.4	18.4	14.0	14.0	12.0
18.0			15.7	16.3	12.6	13.1	12.0
20.0			12.9	14.2	11.5	11.7	11.0
22.0			10.5	12.0	10.5	10.4	9.8
24.0			8.6	10.1	9.6	9.3	8.8
26.0				8.5	8.9	8.4	7.9
28.0				7.2	8.1	7.6	7.1
30.0				6.1	7.0	6.9	6.5
32.0				5.1	6.0	6.3	5.9
34.0					5.1	5.5	5.3
36.0					4.4	4.7	4.9
38.0					3.7	4.1	4.3
40.0					3.1	3.5	3.7
42.0					1.4	2.9	3.2
44.0						2.5	2.7
46.0							2.3
48.0							1.9
Critical boom angle (°)	—	—	—	—	—	*11*	*16*
Standard hook	for 70 ton	for 50 ton					
Hook mass	900kg	600kg					
Parts of line	10	7	5	4			

(Unit: Metric ton)

Specification NB1	Outriggers fully extended (8.4m) 360° full range, with 16ton counterweight mounted to crane						
Working radius (m)	11.8m Boom	19.8m Boom	27.88m Boom	35.9m Boom	44.0m Boom	48.0m Boom	52.0m Boom
2.5	70.0						
3.0	70.0	50.0					
3.5	70.0	50.0					
4.0	70.0	50.0	35.0				
4.5	70.0	50.0	35.0				
5.0	70.0	50.0	35.0	24.0			
6.0	66.6	50.0	35.0	24.0			
7.0	56.1	50.0	35.0	24.0	17.0	14.0	
8.0	48.1	47.2	35.0	24.0	17.0	14.0	12.0
9.0	41.9	41.0	35.0	24.0	17.0	14.0	12.0
10.0		36.0	33.7	24.0	17.0	14.0	12.0
12.0		27.9	27.4	23.2	17.0	14.0	12.0
14.0		21.3	20.9	20.7	15.8	14.0	12.0
16.0		16.8	16.4	17.9	14.0	14.0	12.0
18.0			13.1	14.6	12.6	13.1	12.0
20.0			10.4	12.0	11.5	11.7	11.0
22.0			8.3	9.9	10.5	10.4	9.8
24.0			6.7	8.2	9.2	9.3	8.8
26.0				6.8	7.7	8.1	7.9
28.0				5.6	6.5	6.8	7.1
30.0				4.6	5.5	5.8	6.1
32.0				3.7	4.6	4.9	5.2
34.0					3.9	4.2	4.4
36.0					3.2	3.5	3.7
38.0					2.5	2.9	3.1
40.0					2.0	2.3	2.6
42.0					1.4	1.8	2.1
44.0						1.3	1.6
46.0							1.2
Critical boom angle (°)	—	—	—	—	—	*16*	*22*
Standard hook	for 70 ton	for 50 ton					
Hook mass	900kg	600kg					
Parts of line	10	7	5	4			

(Unit: Metric ton)

Boom (Operation of boom without SL jib)

Specification NC1	Outriggers fully extended (8.4m) 360° full range, with 8.5ton counterweight mounted to crane						
Working radius (m)	11.8m Boom	19.8m Boom	27.88m Boom	35.9m Boom	44.0m Boom	48.0m Boom	52.0m Boom
2.5	70.0						
3.0	70.0	50.0					
3.5	70.0	50.0					
4.0	70.0	50.0	35.0				
4.5	70.0	50.0	35.0				
5.0	70.0	50.0	35.0	24.0			
6.0	63.2	50.0	35.0	24.0			
7.0	53.1	50.0	35.0	24.0	17.0	14.0	
8.0	45.5	44.6	35.0	24.0	17.0	14.0	12.0
9.0	39.6	38.7	35.0	24.0	17.0	14.0	12.0
10.0		32.8	32.3	24.0	17.0	14.0	12.0
12.0		23.6	23.2	23.2	17.0	14.0	12.0
14.0		17.8	17.4	18.9	15.8	14.0	12.0
16.0		13.9	13.4	14.9	14.0	14.0	12.0
18.0			10.4	11.9	12.6	13.0	12.0
20.0			8.1	9.6	10.5	10.8	11.0
22.0			6.2	7.6	8.6	8.9	9.4
24.0			4.7	5.9	6.9	7.2	7.7
26.0				4.6	5.5	5.9	6.4
28.0				3.5	4.4	4.8	5.2
30.0				2.6	3.5	3.8	4.2
32.0				1.8	2.7	3.0	3.4
34.0					2.0	2.4	2.7
36.0					1.5	1.8	2.1
38.0						1.3	1.6
40.0							1.1
Critical boom angle (°)	—	—	—	—	*32*	*35*	*38*
Standard hook	for 70 ton	for 50 ton					
Hook mass	900kg	600kg					
Parts of line	10	7	5	4			

(Unit: Metric ton)

Specification ND1	Outriggers fully extended (8.4m) 360° full range, with 24ton or 16ton counterweight stowed in carrier						
Working radius (m)	11.8m Boom	19.8m Boom	27.88m Boom	35.9m Boom	44.0m Boom	48.0m Boom	52.0m Boom
2.5	70.0						
3.0	70.0	50.0					
3.5	70.0	50.0					
4.0	70.0	50.0	35.0				
4.5	70.0	50.0	35.0				
5.0	70.0	50.0	35.0	24.0			
6.0	60.2	50.0	35.0	24.0			
7.0	50.2	49.1	35.0	24.0	17.0	14.0	
8.0	42.8	41.9	35.0	24.0	17.0	14.0	12.0
9.0	37.0	36.3	35.0	24.0	17.0	14.0	12.0
10.0		31.8	31.4	24.0	17.0	14.0	12.0
12.0		21.9	21.4	23.2	17.0	14.0	12.0
14.0		15.3	14.9	16.8	15.8	14.0	12.0
16.0		11.1	10.7	12.5	13.5	13.9	12.0
18.0			7.8	9.5	10.5	10.8	11.1
20.0			5.7	7.3	8.2	8.6	8.8
22.0			4.1	5.5	6.5	6.9	7.1
24.0			2.6	4.1	5.1	5.4	5.7
26.0				2.9	3.9	4.3	4.5
28.0				2.0	2.9	3.3	3.6
30.0				1.2	2.1	2.5	2.7
32.0					1.4	1.8	2.0
34.0						1.2	1.4
Critical boom angle (°)	—	—	—	*29*	*42*	*44*	*48*
Standard hook	for 70 ton	for 50 ton					
Hook mass	900kg	600kg					
Parts of line	10	7	5	4			

(Unit: Metric ton)

Boom (Operation of boom without SL jib)

Specification NE1	Outriggers fully extended (8.4m) 360° full range, with 8.5ton counterweight stowed in carrier or without counterweight						
Working radius (m)	11.8m Boom	19.8m Boom	27.88m Boom	35.9m Boom	44.0m Boom	48.0m Boom	52.0m Boom
2.5	70.0						
3.0	70.0	50.0					
3.5	70.0	50.0					
4.0	70.0	50.0	35.0				
4.5	70.0	50.0	35.0				
5.0	70.0	50.0	35.0	24.0			
6.0	60.2	50.0	35.0	24.0			
7.0	50.2	49.1	35.0	24.0	17.0	14.0	
8.0	41.1	39.9	35.0	24.0	17.0	14.0	12.0
9.0	32.9	31.7	31.4	24.0	17.0	14.0	12.0
10.0		26.0	25.6	24.0	17.0	14.0	12.0
12.0		18.4	18.0	19.8	17.0	14.0	12.0
14.0		13.4	12.9	14.9	15.8	14.0	12.0
16.0		9.6	9.1	10.9	11.9	12.3	12.0
18.0			6.5	8.2	9.1	9.5	9.8
20.0			4.6	6.1	7.1	7.4	7.7
22.0			2.9	4.4	5.5	5.8	6.1
24.0			1.4	3.1	4.1	4.5	4.8
26.0				2.0	3.0	3.4	3.7
28.0				1.2	2.1	2.5	2.7
30.0					1.4	1.7	2.0
Critical boom angle (°)	—	—	—	*36*	*46*	*50*	*54*
Standard hook	for 70 ton	for 50 ton					
Hook mass	900kg	600kg					
Parts of line	10	7	5	4			

(Unit: Metric ton)

44m Boom + 9.2m SL Jib

Specification SA1 Outriggers fully extended (8.4m) 360° full range, with 24ton counterweight mounted to crane

Offset	5°		15°		30°		45°		60°	
Working radius (m)	Boom angle (°)	Load (ton)	Boom angle (°)	Load (ton)	Boom angle (°)	Load (ton)	Boom angle (°)	Load (ton)	Boom angle (°)	Load (ton)
7.0	82.3	7.00								
8.0	81.3	7.00	82.9	7.00						
9.0	80.4	7.00	81.9	7.00						
10.0	79.4	7.00	80.8	7.00	82.8	5.90				
12.0	77.4	7.00	78.9	7.00	80.7	5.90	82.2	4.80		
14.0	75.4	7.00	76.9	7.00	78.6	5.90	80.0	4.80	80.9	3.90
16.0	73.4	7.00	74.9	7.00	76.5	5.60	77.8	4.80	78.6	3.90
18.0	71.3	7.00	72.8	6.60	74.3	5.35	75.5	4.65	76.2	3.85
20.0	69.2	6.75	70.5	6.05	72.1	5.10	73.2	4.50	73.9	3.80
22.0	66.9	5.90	68.1	5.40	69.7	4.85	70.9	4.40	71.3	3.75
24.0	64.5	5.25	65.7	4.80	67.3	4.40	68.4	4.10	68.9	3.75
26.0	62.0	4.65	63.2	4.35	64.8	3.95	65.8	3.75	66.2	3.65
28.0	59.5	4.15	60.7	3.90	62.2	3.60	63.1	3.45	63.5	3.40
30.0	56.9	3.75	58.1	3.50	59.5	3.30	60.4	3.15		
32.0	54.2	3.35	55.3	3.20	56.8	3.00	57.5	2.90		
34.0	51.4	3.05	52.6	2.90	53.9	2.75	54.5	2.70		
36.0	48.2	2.75	49.6	2.65	50.8	2.50	51.3	2.45		
38.0	45.2	2.40	46.4	2.40	47.6	2.30	47.7	2.30		
40.0	41.7	1.80	42.9	1.95	43.8	2.10				
42.0	38.1	1.20	39.1	1.35	39.9	1.50				
44.0			35.1	0.75	35.7	0.85				
Critical boom angle (°)	34		34		34		47		62	
Standard hook	for 7.8 ton									
Hook mass	250kg									
Parts of line	1									

44m Boom + 15.0m SL Jib

Specification SA1 Outriggers fully extended (8.4m) 360° full range, with 24ton counterweight mounted to crane

Offset	2°		15°		30°		45°		60°	
Working radius (m)	Boom angle (°)	Load (ton)	Boom angle (°)	Load (ton)	Boom angle (°)	Load (ton)	Boom angle (°)	Load (ton)	Boom angle (°)	Load (ton)
8.0	82.4	4.00								
9.0	81.5	4.00								
10.0	80.6	4.00								
12.0	78.8	4.00	81.9	4.00						
14.0	77.0	4.00	80.1	4.00	83.0	3.15				
16.0	75.3	4.00	78.3	4.00	81.1	3.15	83.4	2.55		
18.0	73.4	4.00	76.4	4.00	79.2	3.15	81.4	2.55	83.1	2.00
20.0	71.6	4.00	74.4	3.85	77.1	3.00	79.3	2.55	80.8	2.00
22.0	69.7	4.00	72.5	3.60	75.1	2.85	77.2	2.45	78.5	2.00
24.0	67.7	4.00	70.4	3.40	72.9	2.75	75.0	2.35	76.2	1.95
26.0	65.7	4.00	68.3	3.20	70.8	2.60	72.7	2.30	73.8	1.95
28.0	63.6	3.60	66.2	3.05	68.6	2.50	70.5	2.25	71.4	1.90
30.0	61.3	3.20	64.0	2.85	66.3	2.40	68.1	2.15	68.8	1.90
32.0	59.0	2.90	61.6	2.60	64.0	2.35	65.6	2.10	66.2	1.90
34.0	56.7	2.60	59.3	2.40	61.6	2.20	63.1	2.10	63.5	1.90
36.0	54.2	2.35	56.8	2.15	59.0	2.00	60.4	1.95		
38.0	51.6	2.10	54.2	1.95	56.4	1.85	57.6	1.80		
40.0	48.9	1.90	51.6	1.80	53.6	1.70	54.5	1.65		
42.0	46.1	1.75	48.6	1.65	50.6	1.55	51.3	1.55		
44.0	43.0	1.55	45.6	1.50	47.4	1.45	47.8	1.40		
46.0	39.3	1.10	42.2	1.35	43.7	1.30				
48.0			38.7	0.90	39.9	1.10				
Critical boom angle (°)	38		38		38		47		62	
Standard hook	for 7.8 ton									
Hook mass	250kg									
Parts of line	1									

44m Boom + 20.8m SL Jib

Specification SA1 Outriggers fully extended (8.4m) 360° full range, with 24ton counterweight mounted to crane

Offset	2°		15°		30°		45°		60°	
Working radius (m)	Boom angle (°)	Load (ton)	Boom angle (°)	Load (ton)	Boom angle (°)	Load (ton)	Boom angle (°)	Load (ton)	Boom angle (°)	Load (ton)
9.0	82.6	3.75								
10.0	81.8	3.75								
12.0	80.3	3.75								
14.0	78.7	3.75	82.4	2.90						
16.0	77.1	3.75	80.8	2.90						
18.0	75.5	3.75	79.1	2.90	82.7	1.95				
20.0	73.9	3.75	77.3	2.75	81.0	1.95				
22.0	72.1	3.45	75.5	2.55	79.2	1.95	82.2	1.50		
24.0	70.3	3.20	73.7	2.40	77.3	1.85	80.3	1.50	82.4	1.20
26.0	68.5	2.95	71.8	2.25	75.3	1.75	78.2	1.50	80.1	1.20
28.0	66.6	2.75	69.9	2.10	73.4	1.70	76.2	1.45	77.9	1.20
30.0	64.7	2.55	68.0	2.00	71.4	1.60	74.1	1.40	75.7	1.15
32.0	62.7	2.40	66.0	1.90	69.3	1.55	71.8	1.35	73.2	1.15
34.0	60.7	2.20	64.0	1.80	67.3	1.50	69.6	1.30	70.8	1.15
36.0	58.7	2.10	61.9	1.70	65.0	1.40	67.4	1.30	68.2	1.15
38.0	56.5	1.90	59.7	1.60	62.8	1.35	64.9	1.25	65.5	1.10
40.0	54.2	1.70	57.5	1.55	60.5	1.30	62.3	1.20	62.8	1.10
42.0	51.8	1.55	55.2	1.45	58.1	1.30	59.8	1.20		
44.0	49.5	1.40	52.7	1.30	55.5	1.25	57.0	1.20		
46.0	46.9	1.25	50.1	1.20	52.8	1.10	54.0	1.10		
48.0	44.2	1.15	47.3	1.10	49.9	1.05	50.7	1.00		
50.0	41.3	1.05	44.2	1.00	46.6	0.95				
52.0			40.9	0.90	43.1	0.85				
54.0					39.2	0.75				
Critical boom angle (°)	38		38		38		47		62	
Standard hook	for 7.8 ton									
Hook mass	250kg									
Parts of line	1									

44m Boom + 26.6m SL Jib

Specification SA1 Outriggers fully extended (8.4m) 360° full range, with 24ton counterweight mounted to crane

Offset	2°		15°		30°		45°		60°	
Working radius (m)	Boom angle (°)	Load (ton)	Boom angle (°)	Load (ton)	Boom angle (°)	Load (ton)	Boom angle (°)	Load (ton)	Boom angle (°)	Load (ton)
10.0	82.6	2.20								
12.0	81.3	2.20								
14.0	79.8	2.20								
16.0	78.5	2.20	83.2	1.90						
18.0	77.0	2.20	81.7	1.90						
20.0	75.6	2.20	80.1	1.90						
22.0	74.1	2.20	78.6	1.80	83.0	1.20				
24.0	72.6	2.20	77.0	1.70	81.3	1.20				
26.0	71.2	2.20	75.3	1.60	79.7	1.20	83.3	0.90		
28.0	69.5	2.05	73.6	1.50	77.9	1.15	81.5	0.90		
30.0	67.8	1.90	71.8	1.40	76.0	1.10	79.6	0.90	82.1	0.75
32.0	66.0	1.75	70.1	1.35	74.2	1.05	77.6	0.85	80.0	0.75
34.0	64.3	1.65	68.2	1.25	72.4	1.00	75.6	0.85	77.7	0.75
36.0	62.5	1.55	66.4	1.20	70.4	0.95	73.5	0.80	75.4	0.70
38.0	60.5	1.45	64.5	1.15	68.6	0.95	71.4	0.80	73.0	0.70
40.0	58.7	1.35	62.6	1.10	66.5	0.90	69.2	0.80	70.6	0.70
42.0	56.7	1.25	60.6	1.00	64.3	0.85	66.9	0.75	67.9	0.70
44.0	54.7	1.20	58.5	0.95	62.2	0.80	64.6	0.75	65.2	0.70
46.0	52.5	1.10	56.4	0.90	59.9	0.80	62.1	0.75		
48.0	50.4	1.05	54.3	0.90	57.5	0.75	59.4	0.70		
50.0	48.0	0.95	51.9	0.85	55.1	0.75	56.7	0.70		
52.0	45.1	0.85	49.5	0.80	52.5	0.70	53.6	0.70		
54.0	42.5	0.75	46.6	0.70	49.6	0.70	50.2	0.70		
Critical boom angle (°)	41		45		48		49		62	
Standard hook	for 7.8 ton									
Hook mass	250kg									
Parts of line	1									

48m Boom + 9.2m SL Jib

Specification SA1 Outriggers fully extended (8.4m) 360° full range, with 24ton counterweight mounted to crane

Offset	5°		15°		30°		45°		60°	
Working radius (m)	Boom angle (°)	Load (ton)	Boom angle (°)	Load (ton)	Boom angle (°)	Load (ton)	Boom angle (°)	Load (ton)	Boom angle (°)	Load (ton)
7.0	82.9	6.00								
8.0	81.9	6.00								
9.0	81.1	6.00	82.5	6.00						
10.0	80.2	6.00	81.6	6.00						
12.0	78.4	6.00	79.8	6.00	81.7	5.90	82.9	4.80		
14.0	76.7	6.00	78.0	6.00	79.8	5.90	81.0	4.80	81.8	3.85
16.0	74.9	6.00	76.2	6.00	77.9	5.75	79.1	4.80	79.7	3.85
18.0	72.9	6.00	74.3	6.00	76.0	5.50	77.1	4.75	77.6	3.85
20.0	71.1	6.00	72.4	6.00	73.9	5.25	75.0	4.60	75.5	3.80
22.0	69.2	6.00	70.5	6.00	71.8	5.05	72.8	4.45	73.3	3.80
24.0	67.3	6.00	68.5	5.80	69.8	4.85	70.7	4.35	71.1	3.75
26.0	65.2	5.80	66.3	5.40	67.6	4.65	68.5	4.25	68.8	3.75
28.0	62.9	5.10	64.1	4.95	65.4	4.45	66.2	4.10	66.5	3.70
30.0	60.5	4.55	61.7	4.40	63.0	4.15	63.8	3.85	63.9	3.70
32.0	58.1	4.05	59.2	3.95	60.6	3.80	61.4	3.65		
34.0	55.3	3.65	56.7	3.55	58.0	3.45	58.7	3.40		
36.0	52.7	3.25	54.0	3.20	55.4	3.10	55.9	3.10		
38.0	49.9	2.60	50.8	2.80	52.5	2.80	52.9	2.80		
40.0	47.1	2.00	47.9	2.15	49.5	2.30	49.4	2.35		
42.0	44.1	1.40	44.9	1.55	46.2	1.70				
44.0	40.8	0.85	41.6	1.00	42.8	1.15				
Critical boom angle (°)	39		40		41		47		62	
Standard hook	for 7.8 ton									
Hook mass	250kg									
Parts of line	1									

48m Boom + 15.0m SL Jib

Specification SA1 Outriggers fully extended (8.4m) 360° full range, with 24ton counterweight mounted to crane

Offset	2°		15°		30°		45°		60°	
Working radius (m)	Boom angle (°)	Load (ton)	Boom angle (°)	Load (ton)	Boom angle (°)	Load (ton)	Boom angle (°)	Load (ton)	Boom angle (°)	Load (ton)
8.0	83.0	4.00								
9.0	82.2	4.00								
10.0	81.4	4.00								
12.0	79.8	4.00	82.7	4.00						
14.0	78.2	4.00	81.0	4.00	83.6	3.15				
16.0	76.5	4.00	79.4	4.00	81.9	3.15				
18.0	74.9	4.00	77.7	4.00	80.2	3.15	82.3	2.50		
20.0	73.2	4.00	75.9	3.95	78.4	3.05	80.4	2.50	81.7	2.00
22.0	71.5	4.00	74.2	3.75	76.6	2.95	78.4	2.50	79.7	2.00
24.0	69.8	4.00	72.3	3.50	74.6	2.80	76.5	2.40	77.6	1.95
26.0	68.0	4.00	70.4	3.35	72.7	2.70	74.5	2.35	75.5	1.95
28.0	66.2	4.00	68.5	3.15	70.7	2.60	72.4	2.25	73.2	1.90
30.0	64.3	3.75	66.5	3.00	68.7	2.50	70.3	2.20	71.1	1.90
32.0	62.3	3.55	64.4	2.85	66.6	2.40	68.1	2.15	68.7	1.90
34.0	60.2	3.35	62.4	2.75	64.4	2.30	65.9	2.10	66.3	1.90
36.0	58.0	3.05	60.3	2.60	62.3	2.25	63.5	2.05	63.8	1.90
38.0	55.6	2.75	58.0	2.50	60.0	2.20	61.2	2.05		
40.0	53.1	2.45	55.6	2.35	57.6	2.10	58.6	2.00		
42.0	50.6	2.15	52.9	2.15	55.0	2.00	55.9	1.90		
44.0	47.9	1.65	50.4	1.95	52.2	1.85	52.9	1.60		
46.0	44.9	1.20	47.4	1.50	49.0	1.75	49.9	1.05		
48.0	41.6	0.75	44.3	1.05	45.9	1.25				
50.0					42.5	0.75				
Critical boom angle (°)	41		42		42		47		62	
Standard hook	for 7.8 ton									
Hook mass	250kg									
Parts of line	1									

Super luffing jib (Operation of SL jib)

48m Boom + 20.8m SL Jib										
Specification SA1	Outriggers fully extended (8.4m) 360° full range, with 24ton counterweight mounted to crane									
Offset	2°		15°		30°		45°		60°	
Working radius (m)	Boom angle (°)	Load (ton)	Boom angle (°)	Load (ton)	Boom angle (°)	Load (ton)	Boom angle (°)	Load (ton)	Boom angle (°)	Load (ton)
9.0	83.1	3.50								
10.0	82.3	3.50								
12.0	80.9	3.50								
14.0	79.5	3.50	83.1	2.90						
16.0	78.0	3.50	81.6	2.90						
18.0	76.6	3.50	80.0	2.90	83.4	1.95				
20.0	75.1	3.50	78.4	2.80	81.8	1.95				
22.0	73.7	3.50	76.9	2.65	80.1	1.95	82.9	1.50		
24.0	72.0	3.35	75.2	2.50	78.4	1.90	81.1	1.50	83.0	1.20
26.0	70.4	3.10	73.4	2.35	76.6	1.80	79.3	1.50	81.2	1.20
28.0	68.6	2.90	71.7	2.20	74.9	1.75	77.4	1.45	79.1	1.20
30.0	66.9	2.70	70.0	2.10	73.1	1.65	75.5	1.40	77.0	1.15
32.0	65.1	2.55	68.1	1.95	71.2	1.60	73.5	1.35	74.9	1.15
34.0	63.3	2.35	66.2	1.85	69.3	1.50	71.6	1.35	72.7	1.15
36.0	61.4	2.25	64.5	1.80	67.4	1.45	69.4	1.30	70.4	1.10
38.0	59.5	2.10	62.5	1.70	65.3	1.40	67.3	1.25	68.1	1.10
40.0	57.5	1.95	60.5	1.60	63.3	1.35	65.1	1.25	65.6	1.10
42.0	55.5	1.85	58.5	1.55	61.2	1.30	62.8	1.20	63.1	1.10
44.0	53.5	1.75	56.3	1.45	58.9	1.30	60.5	1.20		
46.0	51.2	1.65	54.1	1.40	56.6	1.25	57.9	1.20		
48.0	48.7	1.50	51.6	1.35	54.1	1.20	55.2	1.15		
50.0	46.2	1.10	48.9	1.30	51.8	1.20	52.3	1.15		
52.0			46.2	1.10	48.9	1.15	49.0	1.10		
54.0					45.7	0.90				
Critical boom angle (°)	44		44		44		47		62	
Standard hook	for 7.8 ton									
Hook mass	250kg									
Parts of line	1									

48m Boom + 26.6m SL Jib										
Specification SA1	Outriggers fully extended (8.4m) 360° full range, with 24ton counterweight mounted to crane									
Offset	2°		15°		30°		45°		60°	
Working radius (m)	Boom angle (°)	Load (ton)	Boom angle (°)	Load (ton)	Boom angle (°)	Load (ton)	Boom angle (°)	Load (ton)	Boom angle (°)	Load (ton)
10.0	83.1	2.10								
12.0	81.8	2.10								
14.0	80.5	2.10								
16.0	79.2	2.10	83.7	1.85						
18.0	77.9	2.10	82.3	1.85						
20.0	76.5	2.10	80.8	1.85						
22.0	75.2	2.10	79.5	1.85	83.5	1.20				
24.0	73.9	2.10	78.0	1.75	82.0	1.20				
26.0	72.4	2.10	76.4	1.65	80.4	1.20	83.9	0.90		
28.0	71.1	2.10	74.9	1.55	78.9	1.15	82.2	0.90		
30.0	69.6	2.00	73.3	1.45	77.3	1.10	80.5	0.90	82.8	0.75
32.0	68.0	1.85	71.7	1.40	75.6	1.05	78.6	0.85	80.9	0.75
34.0	66.3	1.75	70.0	1.30	73.8	1.00	76.8	0.85	78.8	0.75
36.0	64.7	1.65	68.4	1.25	72.1	1.00	75.0	0.80	76.7	0.70
38.0	63.0	1.55	66.6	1.20	70.3	0.95	73.1	0.80	74.7	0.70
40.0	61.2	1.45	64.9	1.15	68.4	0.90	71.2	0.80	72.4	0.70
42.0	59.5	1.35	63.1	1.05	66.7	0.90	69.2	0.80	70.1	0.70
44.0	57.6	1.25	61.2	1.00	64.6	0.85	67.0	0.75	67.7	0.70
46.0	55.8	1.20	59.3	0.95	62.7	0.80	64.8	0.75	65.2	0.70
48.0	53.8	1.15	57.3	0.90	60.6	0.80	62.6	0.75	62.5	0.70
50.0	52.2	1.05	55.4	0.90	58.4	0.75	60.0	0.70		
52.0	50.1	1.00	53.2	0.85	56.2	0.75	57.5	0.70		
54.0	47.8	0.95	50.7	0.80	53.7	0.70	54.8	0.70		
56.0			47.8	0.75	51.1	0.70	51.9	0.70		
58.0					47.8	0.70	48.5	0.70		
Critical boom angle (°)	46		46		46		47		62	
Standard hook	for 7.8 ton									
Hook mass	250kg									
Parts of line	1									

52m Boom + 9.2m SL Jib										
Specification SA1	Outriggers fully extended (8.4m) 360° full range, with 24ton counterweight mounted to crane									
Offset	5°		15°		30°		45°		60°	
Working radius (m)	Boom angle (°)	Load (ton)	Boom angle (°)	Load (ton)	Boom angle (°)	Load (ton)	Boom angle (°)	Load (ton)	Boom angle (°)	Load (ton)
8.0	82.5	5.20								
9.0	81.7	5.20								
10.0	80.9	5.20	82.2	5.20						
12.0	79.3	5.20	80.6	5.20	82.3	5.20				
14.0	77.7	5.20	79.0	5.20	80.7	5.20	81.9	4.80	82.5	3.85
16.0	76.0	5.20	77.3	5.20	79.0	5.20	80.2	4.80	80.7	3.85
18.0	74.4	5.20	75.6	5.20	77.3	5.20	78.4	4.80	78.9	3.85
20.0	72.7	5.20	73.9	5.20	75.6	5.20	76.6	4.65	77.0	3.85
22.0	71.0	5.20	72.2	5.20	73.8	5.15	74.6	4.55	75.0	3.80
24.0	69.3	5.20	70.5	5.20	71.9	4.90	72.7	4.40	73.1	3.75
26.0	67.5	5.20	68.6	5.15	69.9	4.55	70.7	4.20	71.0	3.75
28.0	65.7	5.20	66.7	4.75	67.8	4.20	68.6	3.90	68.9	3.70
30.0	63.5	4.55	64.6	4.35	65.8	3.95	66.5	3.65	66.8	3.55
32.0	61.4	4.05	62.5	4.00	63.6	3.65	64.3	3.45	64.5	3.40
34.0	59.0	3.55	60.1	3.55	61.4	3.40	62.1	3.25		
36.0	56.6	3.15	57.6	3.15	59.1	3.15	59.7	3.05		
38.0	54.1	2.70	55.3	2.80	56.5	2.80	56.9	2.80		
40.0	51.5	2.10	52.7	2.25	53.9	2.45	54.3	2.50		
42.0	48.8	1.55	49.8	1.70	51.0	1.85	51.4	1.95		
44.0	46.0	1.00	47.0	1.15	48.0	1.35				
46.0					45.0	0.75				
Critical boom angle (°)	44		44		44		48		63	
Standard hook	for 7.8 ton									
Hook mass	250kg									
Parts of line	1									

52m Boom + 15.0m SL Jib										
Specification SA1	Outriggers fully extended (8.4m) 360° full range, with 24ton counterweight mounted to crane									
Offset	2°		15°		30°		45°		60°	
Working radius (m)	Boom angle (°)	Load (ton)	Boom angle (°)	Load (ton)	Boom angle (°)	Load (ton)	Boom angle (°)	Load (ton)	Boom angle (°)	Load (ton)
9.0	82.8	4.00								
10.0	82.1	4.00								
12.0	80.6	4.00	83.3	4.00						
14.0	79.1	4.00	81.8	4.00						
16.0	77.7	4.00	80.3	4.00	82.6	3.10				
18.0	76.2	4.00	78.8	4.00	81.1	3.10	83.0	2.50		
20.0	74.7	4.00	77.3	4.00	79.5	3.10	81.3	2.50	82.5	1.95
22.0	73.2	4.00	75.6	3.85	77.8	3.00	79.6	2.50	80.7	1.95
24.0	71.6	4.00	74.0	3.65	76.1	2.85	77.8	2.45	78.8	1.95
26.0	70.0	4.00	72.3	3.45	74.4	2.75	76.0	2.35	76.9	1.95
28.0	68.5	4.00	70.6	3.30	72.6	2.65	74.2	2.30	74.9	1.95
30.0	66.8	3.95	68.8	3.15	70.7	2.55	72.2	2.25	73.0	1.90
32.0	65.0	3.60	67.0	3.00	68.9	2.45	70.3	2.20	70.9	1.90
34.0	63.1	3.30	65.2	2.85	67.1	2.40	68.4	2.15	68.8	1.90
36.0	61.1	3.05	63.2	2.65	65.0	2.30	66.3	2.10	66.6	1.90
38.0	58.9	2.75	61.2	2.50	63.1	2.25	64.2	2.05	64.4	1.90
40.0	56.8	2.50	59.1	2.30	60.9	2.10	61.9	2.00		
42.0	54.4	2.20	56.8	2.10	58.7	1.95	59.6	1.85		
44.0	52.0	1.75	54.3	1.95	56.2	1.80	57.1	1.75		
46.0	49.3	1.30	51.9	1.60	53.7	1.70	54.2	1.65		
48.0	47.0	0.85	49.1	1.15	50.9	1.40	51.6	1.50		
50.0					48.1	0.95				
Critical boom angle (°)	46		47		47		50		63	
Standard hook	for 7.8 ton									
Hook mass	250kg									
Parts of line	1									

52m Boom + 20.8m SL Jib										
Specification SA1	Outriggers fully extended (8.4m) 360° full range, with 24ton counterweight mounted to crane									
Offset	2°		15°		30°		45°		60°	
Working radius (m)	Boom angle (°)	Load (ton)	Boom angle (°)	Load (ton)	Boom angle (°)	Load (ton)	Boom angle (°)	Load (ton)	Boom angle (°)	Load (ton)
10.0	82.7	3.00								
12.0	81.4	3.00								
14.0	80.1	3.00	83.6	2.90						
16.0	78.8	3.00	82.3	2.90						
18.0	77.5	3.00	80.9	2.90						
20.0	76.1	3.00	79.5	2.90	82.5	1.95				
22.0	74.7	3.00	78.0	2.70	81.0	1.95	83.5	1.50		
24.0	73.3	3.00	76.5	2.55	79.4	1.95	81.9	1.50		
26.0	71.9	3.00	74.9	2.40	77.9	1.85	80.3	1.50	81.9	1.15
28.0	70.5	3.00	73.4	2.30	76.2	1.75	78.6	1.50	80.1	1.15
30.0	69.0	2.85	71.7	2.15	74.6	1.70	76.9	1.45	78.2	1.15
32.0	67.4	2.70	70.1	2.05	72.9	1.60	75.1	1.40	76.4	1.15
34.0	65.7	2.50	68.4	1.95	71.1	1.55	73.3	1.35	74.4	1.15
36.0	64.0	2.35	66.8	1.85	69.4	1.50	71.4	1.30	72.3	1.10
38.0	62.3	2.25	65.0	1.75	67.6	1.45	69.5	1.30	70.3	1.10
40.0	60.5	2.10	63.2	1.70	65.8	1.40	67.5	1.25	68.1	1.10
42.0	58.8	2.00	61.4	1.60	63.9	1.35	65.5	1.25	65.9	1.10
44.0	56.6	1.85	59.5	1.55	61.9	1.30	63.4	1.20	63.5	1.10
46.0	54.4	1.70	57.6	1.50	59.8	1.25	61.2	1.20		
48.0	52.2	1.55	55.4	1.40	57.8	1.25	58.9	1.15		
50.0	49.8	1.15	52.7	1.30	55.5	1.20	56.5	1.15		
52.0	47.6	0.75	50.4	1.15	53.0	1.15	53.7	1.10		
54.0			48.1	0.75	50.5	1.05	50.8	1.05		
Critical boom angle (°)	47		47		49		49		63	
Standard hook	for 7.8 ton									
Hook mass	250kg									
Parts of line	1									

52m Boom + 26.6m SL Jib										
Specification SA1	Outriggers fully extended (8.4m) 360° full range, with 24ton counterweight mounted to crane									
Offset	2°		15°		30°		45°		60°	
Working radius (m)	Boom angle (°)	Load (ton)	Boom angle (°)	Load (ton)	Boom angle (°)	Load (ton)	Boom angle (°)	Load (ton)	Boom angle (°)	Load (ton)
12.0	82.2	2.00								
14.0	81.1	2.00								
16.0	79.9	2.00	84.1	1.85						
18.0	78.7	2.00	82.8	1.85						
20.0	77.5	2.00	81.6	1.85						
22.0	76.2	2.00	80.3	1.85	83.9	1.15				
24.0	75.0	2.00	78.9	1.75	82.5	1.15				
26.0	73.7	2.00	77.5	1.65	81.1	1.15				
28.0	72.4	2.00	76.1	1.60	79.7	1.15	82.8	0.85		
30.0	71.1	2.00	74.6	1.50	78.2	1.10	81.2	0.85	83.4	0.75
32.0	69.8	1.95	73.2	1.45	76.7	1.05	79.6	0.85	81.6	0.75
34.0	68.3	1.85	71.7	1.35	75.2	1.05	78.0	0.85	79.8	0.75
36.0	66.8	1.75	70.2	1.30	73.6	1.00	76.3	0.85	78.0	0.70
38.0	65.2	1.65	68.6	1.25	71.9	0.95	74.6	0.80	76.1	0.70
40.0	63.7	1.55	67.1	1.20	70.3	0.95	72.8	0.80	74.1	0.70
42.0	62.1	1.45	65.3	1.10	68.6	0.90	71.1	0.80	72.1	0.70
44.0	60.4	1.35	63.7	1.05	66.9	0.85	69.1	0.75	70.0	0.70
46.0	58.8	1.30	62.0	1.00	65.2	0.85	67.2	0.75	67.8	0.70
48.0	57.0	1.20	60.2	0.95	63.2	0.80	65.2	0.75	65.5	0.70
50.0	55.5	1.15	58.4	0.90	61.4	0.80	63.0	0.70		
52.0	53.5	1.10	56.6	0.90	59.3	0.75	60.8	0.70		
54.0	51.5	1.00	54.3	0.85	57.2	0.75	58.6	0.70		
56.0			51.9	0.80	55.1	0.70	56.1	0.70		
58.0					52.5	0.70	53.3	0.70		
Critical boom angle (°)	50		50		51		52		63	
Standard hook	for 7.8 ton									
Hook mass	250kg									
Parts of line	1									

44m Boom + 9.2m SL Jib

Specification SB1 Outriggers fully extended (8.4m) 360° full range, with 16ton counterweight mounted to crane

Offset	5°		15°		30°		45°		60°	
Working radius (m)	Boom angle (°)	Load (ton)	Boom angle (°)	Load (ton)	Boom angle (°)	Load (ton)	Boom angle (°)	Load (ton)	Boom angle (°)	Load (ton)
7.0	82.3	7.00								
8.0	81.3	7.00	82.9	7.00						
9.0	80.4	7.00	81.9	7.00						
10.0	79.4	7.00	80.8	7.00	82.8	5.90				
12.0	77.4	7.00	78.9	7.00	80.7	5.90	82.2	4.80		
14.0	75.4	7.00	76.9	7.00	78.6	5.90	80.0	4.80	80.9	3.90
16.0	73.4	7.00	74.9	7.00	76.5	5.60	77.8	4.80	78.6	3.90
18.0	71.3	7.00	72.8	6.60	74.3	5.35	75.5	4.65	76.2	3.85
20.0	69.2	6.75	70.5	6.05	72.1	5.10	73.2	4.50	73.9	3.80
22.0	66.9	5.90	68.1	5.40	69.7	4.85	70.9	4.40	71.3	3.75
24.0	64.5	5.25	65.7	4.80	67.3	4.40	68.4	4.10	68.9	3.75
26.0	62.0	4.65	63.2	4.35	64.8	3.95	65.8	3.75	66.2	3.65
28.0	59.5	4.15	60.7	3.90	62.2	3.60	63.1	3.45	63.5	3.40
30.0	56.9	3.75	58.1	3.50	59.5	3.30	60.4	3.15		
32.0	54.2	3.35	55.3	3.20	56.8	3.00	57.5	2.90		
34.0	51.3	2.75	52.6	2.90	53.9	2.75	54.5	2.70		
36.0	47.9	1.95	49.4	2.15	50.8	2.35	51.3	2.45		
38.0	44.7	1.25	46.0	1.45	47.3	1.65	47.5	1.75		
40.0			42.4	0.80	43.4	0.95				
Critical boom angle (°)	42		42		42		47		62	
Standard hook	for 7.8 ton									
Hook mass	250kg									
Parts of line	1									

44m Boom + 15.0m SL Jib

Specification SB1 Outriggers fully extended (8.4m) 360° full range, with 16ton counterweight mounted to crane

Offset	2°		15°		30°		45°		60°	
Working radius (m)	Boom angle (°)	Load (ton)	Boom angle (°)	Load (ton)	Boom angle (°)	Load (ton)	Boom angle (°)	Load (ton)	Boom angle (°)	Load (ton)
8.0	82.4	4.00								
9.0	81.5	4.00								
10.0	80.6	4.00								
12.0	78.8	4.00	81.9	4.00						
14.0	77.0	4.00	80.1	4.00	83.0	3.15				
16.0	75.3	4.00	78.3	4.00	81.1	3.15	83.4	2.55		
18.0	73.4	4.00	76.4	4.00	79.2	3.15	81.4	2.55	83.1	2.00
20.0	71.6	4.00	74.4	3.85	77.1	3.00	79.3	2.55	80.8	2.00
22.0	69.7	4.00	72.5	3.60	75.1	2.85	77.2	2.45	78.5	2.00
24.0	67.7	4.00	70.4	3.40	72.9	2.75	75.0	2.35	76.2	1.95
26.0	65.7	4.00	68.3	3.20	70.8	2.60	72.7	2.30	73.8	1.95
28.0	63.6	3.60	66.2	3.05	68.6	2.50	70.5	2.25	71.4	1.90
30.0	61.3	3.20	64.0	2.85	66.3	2.40	68.1	2.15	68.8	1.90
32.0	59.0	2.90	61.6	2.60	64.0	2.35	65.6	2.10	66.2	1.90
34.0	56.7	2.60	59.3	2.40	61.6	2.20	63.1	2.10	63.5	1.90
36.0	54.2	2.35	56.8	2.15	59.0	2.00	60.4	1.95		
38.0	51.6	2.10	54.2	1.95	56.4	1.85	57.6	1.80		
40.0	48.8	1.65	51.6	1.80	53.6	1.70	54.5	1.65		
42.0	45.8	1.05	48.5	1.45	50.6	1.55	51.3	1.55		
44.0			45.3	0.85	47.3	1.15	47.7	1.20		
Critical boom angle (°)	43		44		44		47		62	
Standard hook	for 7.8 ton									
Hook mass	250kg									
Parts of line	1									

44m Boom + 20.8m SL Jib

Specification SB1 Outriggers fully extended (8.4m) 360° full range, with 16ton counterweight mounted to crane

Offset	2°		15°		30°		45°		60°	
Working radius (m)	Boom angle (°)	Load (ton)	Boom angle (°)	Load (ton)	Boom angle (°)	Load (ton)	Boom angle (°)	Load (ton)	Boom angle (°)	Load (ton)
9.0	82.6	3.75								
10.0	81.8	3.75								
12.0	80.3	3.75								
14.0	78.7	3.75	82.4	2.90						
16.0	77.1	3.75	80.8	2.90						
18.0	75.5	3.75	79.1	2.90	82.7	1.95				
20.0	73.9	3.75	77.3	2.75	81.0	1.95				
22.0	72.1	3.45	75.5	2.55	79.2	1.95	82.2	1.50		
24.0	70.3	3.20	73.7	2.40	77.3	1.85	80.3	1.50	82.4	1.20
26.0	68.5	2.95	71.8	2.25	75.3	1.75	78.2	1.50	80.1	1.20
28.0	66.6	2.75	69.9	2.10	73.4	1.70	76.2	1.45	77.9	1.20
30.0	64.7	2.55	68.0	2.00	71.4	1.60	74.1	1.40	75.7	1.15
32.0	62.7	2.40	66.0	1.90	69.3	1.55	71.8	1.35	73.2	1.15
34.0	60.7	2.20	64.0	1.80	67.3	1.50	69.6	1.30	70.8	1.15
36.0	58.7	2.10	61.9	1.70	65.0	1.40	67.4	1.30	68.2	1.15
38.0	56.5	1.90	59.7	1.60	62.8	1.35	64.9	1.25	65.5	1.10
40.0	54.2	1.70	57.5	1.55	60.5	1.30	62.3	1.20	62.8	1.10
42.0	51.8	1.55	55.2	1.45	58.1	1.30	59.8	1.20		
44.0	49.5	1.40	52.7	1.30	55.5	1.25	57.0	1.20		
46.0	46.8	1.00	50.1	1.20	52.8	1.10	54.0	1.10		
48.0			47.2	0.95	49.9	1.05	50.7	1.00		
50.0					46.5	0.75				
Critical boom angle (°)	44		45		45		47		62	
Standard hook	for 7.8 ton									
Hook mass	250kg									
Parts of line	1									

44m Boom + 26.6m SL Jib

Specification SB1 Outriggers fully extended (8.4m) 360° full range, with 16ton counterweight mounted to crane

Offset	2°		15°		30°		45°		60°	
Working radius (m)	Boom angle (°)	Load (ton)	Boom angle (°)	Load (ton)	Boom angle (°)	Load (ton)	Boom angle (°)	Load (ton)	Boom angle (°)	Load (ton)
10.0	82.6	2.20								
12.0	81.3	2.20								
14.0	79.8	2.20								
16.0	78.5	2.20	83.2	1.90						
18.0	77.0	2.20	81.7	1.90						
20.0	75.6	2.20	80.1	1.90						
22.0	74.1	2.20	78.6	1.80	83.0	1.20				
24.0	72.6	2.20	77.0	1.70	81.3	1.20				
26.0	71.2	2.20	75.3	1.60	79.7	1.20	83.3	0.90		
28.0	69.5	2.05	73.6	1.50	77.9	1.15	81.5	0.90		
30.0	67.8	1.90	71.8	1.40	76.0	1.10	79.6	0.90	82.1	0.75
32.0	66.0	1.75	70.1	1.35	74.2	1.05	77.6	0.85	80.0	0.75
34.0	64.3	1.65	68.2	1.25	72.4	1.00	75.6	0.85	77.7	0.75
36.0	62.5	1.55	66.4	1.20	70.4	0.95	73.5	0.80	75.4	0.70
38.0	60.5	1.45	64.5	1.15	68.6	0.95	71.4	0.80	73.0	0.70
40.0	58.7	1.35	62.6	1.10	66.5	0.90	69.2	0.80	70.6	0.70
42.0	56.7	1.25	60.6	1.00	64.3	0.85	66.9	0.75	67.9	0.70
44.0	54.7	1.20	58.5	0.95	62.2	0.80	64.6	0.75	65.2	0.70
46.0	52.5	1.10	56.4	0.90	59.9	0.80	62.1	0.75		
48.0	50.4	1.05	54.3	0.90	57.5	0.75	59.4	0.70		
50.0	48.0	0.85	51.9	0.85	55.1	0.75	56.7	0.70		
52.0			49.5	0.80	52.5	0.70	53.6	0.70		
54.0					49.6	0.70	50.2	0.70		
Critical boom angle (°)	46		47		47		47		62	
Standard hook	for 7.8 ton									
Hook mass	250kg									
Parts of line	1									

48m Boom + 9.2m SL Jib

Specification SB1 Outriggers fully extended (8.4m) 360° full range, with 16ton counterweight mounted to crane

Offset	5°		15°		30°		45°		60°	
Working radius (m)	Boom angle (°)	Load (ton)	Boom angle (°)	Load (ton)	Boom angle (°)	Load (ton)	Boom angle (°)	Load (ton)	Boom angle (°)	Load (ton)
7.0	82.9	6.00								
8.0	81.9	6.00								
9.0	81.1	6.00	82.5	6.00						
10.0	80.2	6.00	81.6	6.00						
12.0	78.4	6.00	79.8	6.00	81.7	5.90	82.9	4.80		
14.0	76.7	6.00	78.0	6.00	79.8	5.90	81.0	4.80	81.8	3.85
16.0	74.9	6.00	76.2	6.00	77.9	5.75	79.1	4.80	79.7	3.85
18.0	72.9	6.00	74.3	6.00	76.0	5.50	77.1	4.75	77.6	3.85
20.0	71.1	6.00	72.4	6.00	73.9	5.25	75.0	4.60	75.5	3.80
22.0	69.2	6.00	70.5	6.00	71.8	5.05	72.8	4.45	73.3	3.80
24.0	67.3	6.00	68.5	5.80	69.8	4.85	70.7	4.35	71.1	3.75
26.0	65.2	5.80	66.3	5.40	67.6	4.65	68.5	4.25	68.8	3.75
28.0	62.9	5.10	64.1	4.95	65.4	4.45	66.2	4.10	66.5	3.70
30.0	60.5	4.55	61.7	4.40	63.0	4.15	63.8	3.85	63.9	3.70
32.0	58.1	3.65	59.2	3.90	60.6	3.80	61.4	3.65		
34.0	55.1	2.85	56.6	3.05	58.0	3.35	58.7	3.40		
36.0	52.3	2.15	53.7	2.35	55.1	2.60	55.8	2.70		
38.0	49.4	1.45	50.4	1.65	52.1	1.90	52.6	2.00		
40.0			47.4	1.00	48.9	1.20	48.9	1.30		
Critical boom angle (°)	46		46		47		47		62	
Standard hook	for 7.8 ton									
Hook mass	250kg									
Parts of line	1									

48m Boom + 15.0m SL Jib

Specification SB1 Outriggers fully extended (8.4m) 360° full range, with 16ton counterweight mounted to crane

Offset	2°		15°		30°		45°		60°	
Working radius (m)	Boom angle (°)	Load (ton)	Boom angle (°)	Load (ton)	Boom angle (°)	Load (ton)	Boom angle (°)	Load (ton)	Boom angle (°)	Load (ton)
8.0	83.0	4.00								
9.0	82.2	4.00								
10.0	81.4	4.00								
12.0	79.8	4.00	82.7	4.00						
14.0	78.2	4.00	81.0	4.00	83.6	3.15				
16.0	76.5	4.00	79.4	4.00	81.9	3.15				
18.0	74.9	4.00	77.7	4.00	80.2	3.15	82.3	2.50		
20.0	73.2	4.00	75.9	3.95	78.4	3.05	80.4	2.50	81.7	2.00
22.0	71.5	4.00	74.2	3.75	76.6	2.95	78.4	2.50	79.7	2.00
24.0	69.8	4.00	72.3	3.50	74.6	2.80	76.5	2.40	77.6	1.95
26.0	68.0	4.00	70.4	3.35	72.7	2.70	74.5	2.35	75.5	1.95
28.0	66.2	4.00	68.5	3.15	70.7	2.60	72.4	2.25	73.2	1.90
30.0	64.3	3.75	66.5	3.00	68.7	2.50	70.3	2.20	71.1	1.90
32.0	62.3	3.55	64.4	2.85	66.6	2.40	68.1	2.15	68.7	1.90
34.0	60.2	3.35	62.4	2.75	64.4	2.30	65.9	2.10	66.3	1.90
36.0	58.0	2.95	60.3	2.60	62.3	2.25	63.5	2.05	63.8	1.90
38.0	55.5	2.35	58.0	2.50	60.0	2.20	61.2	2.05		
40.0	52.8	1.75	55.6	2.15	57.6	2.10	58.6	2.00		
42.0	50.2	1.20	52.8	1.60	55.0	1.90	55.9	1.90		
44.0			50.0	1.05	52.1	1.35	52.8	1.45		
46.0					48.9	0.75	49.5	0.85		
Critical boom angle (°)	48		48		48		48		62	
Standard hook	for 7.8 ton									
Hook mass	250kg									
Parts of line	1									

Super luffing jib (Operation of SL jib)

48m Boom + 20.8m SL Jib										
Specification SB1	Outriggers fully extended (8.4m) 360° full range, with 16ton counterweight mounted to crane									
Offset	2°		15°		30°		45°		60°	
Working radius (m)	Boom angle (°)	Load (ton)	Boom angle (°)	Load (ton)	Boom angle (°)	Load (ton)	Boom angle (°)	Load (ton)	Boom angle (°)	Load (ton)
9.0	83.1	3.50								
10.0	82.3	3.50								
12.0	80.9	3.50								
14.0	79.5	3.50	83.1	2.90						
16.0	78.0	3.50	81.6	2.90						
18.0	76.6	3.50	80.0	2.90	83.4	1.95				
20.0	75.1	3.50	78.4	2.80	81.8	1.95				
22.0	73.7	3.50	76.9	2.65	80.1	1.95	82.9	1.50		
24.0	72.0	3.35	75.2	2.50	78.4	1.90	81.1	1.50	83.0	1.20
26.0	70.4	3.10	73.4	2.35	76.6	1.80	79.3	1.50	81.2	1.20
28.0	68.6	2.90	71.7	2.20	74.9	1.75	77.4	1.45	79.1	1.20
30.0	66.9	2.70	70.0	2.10	73.1	1.65	75.5	1.40	77.0	1.15
32.0	65.1	2.55	68.1	1.95	71.2	1.60	73.5	1.35	74.9	1.15
34.0	63.3	2.35	66.2	1.85	69.3	1.50	71.6	1.35	72.7	1.15
36.0	61.4	2.25	64.5	1.80	67.4	1.45	69.4	1.30	70.4	1.10
38.0	59.5	2.10	62.5	1.70	65.3	1.40	67.3	1.25	68.1	1.10
40.0	57.5	1.95	60.5	1.60	63.3	1.35	65.1	1.25	65.6	1.10
42.0	55.5	1.85	58.5	1.55	61.2	1.30	62.8	1.20	63.1	1.10
44.0	53.4	1.55	56.3	1.45	58.9	1.30	60.5	1.20		
46.0	51.0	1.05	54.1	1.40	56.6	1.25	57.9	1.20		
48.0			51.5	1.05	54.1	1.20	55.2	1.15		
50.0					51.7	0.95	52.3	1.05		
Critical boom angle (°)	48		49		49		49		62	
Standard hook	for 7.8 ton									
Hook mass	250kg									
Parts of line	1									

48m Boom + 26.6m SL Jib										
Specification SB1	Outriggers fully extended (8.4m) 360° full range, with 16ton counterweight mounted to crane									
Offset	2°		15°		30°		45°		60°	
Working radius (m)	Boom angle (°)	Load (ton)	Boom angle (°)	Load (ton)	Boom angle (°)	Load (ton)	Boom angle (°)	Load (ton)	Boom angle (°)	Load (ton)
10.0	83.1	2.10								
12.0	81.8	2.10								
14.0	80.5	2.10								
16.0	79.2	2.10	83.7	1.85						
18.0	77.9	2.10	82.3	1.85						
20.0	76.5	2.10	80.8	1.85						
22.0	75.2	2.10	79.5	1.85	83.5	1.20				
24.0	73.9	2.10	78.0	1.75	82.0	1.20				
26.0	72.4	2.10	76.4	1.65	80.4	1.20	83.9	0.90		
28.0	71.1	2.10	74.9	1.55	78.9	1.15	82.2	0.90		
30.0	69.6	2.00	73.3	1.45	77.3	1.10	80.5	0.90	82.8	0.75
32.0	68.0	1.85	71.7	1.40	75.6	1.05	78.6	0.85	80.9	0.75
34.0	66.3	1.75	70.0	1.30	73.8	1.00	76.8	0.85	78.8	0.75
36.0	64.7	1.65	68.4	1.25	72.1	1.00	75.0	0.80	76.7	0.70
38.0	63.0	1.55	66.6	1.20	70.3	0.95	73.1	0.80	74.7	0.70
40.0	61.2	1.45	64.9	1.15	68.4	0.90	71.2	0.80	72.4	0.70
42.0	59.5	1.35	63.1	1.05	66.7	0.90	69.2	0.80	70.1	0.70
44.0	57.6	1.25	61.2	1.00	64.6	0.85	67.0	0.75	67.7	0.70
46.0	55.8	1.20	59.3	0.95	62.7	0.80	64.8	0.75	65.2	0.70
48.0	53.8	1.15	57.3	0.90	60.6	0.80	62.6	0.75	62.5	0.70
50.0	52.1	0.90	55.4	0.90	58.4	0.75	60.0	0.70		
52.0			53.2	0.85	56.2	0.75	57.5	0.70		
54.0					53.7	0.70	54.8	0.70		
56.0							51.9	0.70		
Critical boom angle (°)	50		51		51		51		62	
Standard hook	for 7.8 ton									
Hook mass	250kg									
Parts of line	1									

52m Boom + 9.2m SL Jib										
Specification SB1	Outriggers fully extended (8.4m) 360° full range, with 16ton counterweight mounted to crane									
Offset	5°		15°		30°		45°		60°	
Working radius (m)	Boom angle (°)	Load (ton)	Boom angle (°)	Load (ton)	Boom angle (°)	Load (ton)	Boom angle (°)	Load (ton)	Boom angle (°)	Load (ton)
8.0	82.5	5.20								
9.0	81.7	5.20								
10.0	80.9	5.20	82.2	5.20						
12.0	79.3	5.20	80.6	5.20	82.3	5.20				
14.0	77.7	5.20	79.0	5.20	80.7	5.20	81.9	4.80	82.5	3.85
16.0	76.0	5.20	77.3	5.20	79.0	5.20	80.2	4.80	80.7	3.85
18.0	74.4	5.20	75.6	5.20	77.3	5.20	78.4	4.80	78.9	3.85
20.0	72.7	5.20	73.9	5.20	75.6	5.20	76.6	4.65	77.0	3.85
22.0	71.0	5.20	72.2	5.20	73.8	5.15	74.6	4.55	75.0	3.80
24.0	69.3	5.20	70.5	5.20	71.9	4.90	72.7	4.40	73.1	3.75
26.0	67.5	5.20	68.6	5.15	69.9	4.55	70.7	4.20	71.0	3.75
28.0	65.7	5.20	66.7	4.75	67.8	4.20	68.6	3.90	68.9	3.70
30.0	63.5	4.55	64.6	4.35	65.8	3.95	66.5	3.65	66.8	3.55
32.0	61.4	3.80	62.5	4.00	63.6	3.65	64.3	3.45	64.5	3.40
34.0	58.9	3.00	60.1	3.25	61.4	3.40	62.1	3.25		
36.0	56.3	2.30	57.5	2.50	59.0	2.75	59.7	2.90		
38.0	53.7	1.65	54.9	1.85	56.2	2.10	56.7	2.20		
40.0			52.2	1.20	53.4	1.40	53.9	1.50		
Critical boom angle (°)	51		51		51		51		63	
Standard hook	for 7.8 ton									
Hook mass	250kg									
Parts of line	1									

52m Boom + 15.0m SL Jib										
Specification SB1	Outriggers fully extended (8.4m) 360° full range, with 16ton counterweight mounted to crane									
Offset	2°		15°		30°		45°		60°	
Working radius (m)	Boom angle (°)	Load (ton)	Boom angle (°)	Load (ton)	Boom angle (°)	Load (ton)	Boom angle (°)	Load (ton)	Boom angle (°)	Load (ton)
9.0	82.8	4.00								
10.0	82.1	4.00								
12.0	80.6	4.00	83.3	4.00						
14.0	79.1	4.00	81.8	4.00						
16.0	77.7	4.00	80.3	4.00	82.6	3.10				
18.0	76.2	4.00	78.8	4.00	81.1	3.10	83.0	2.50		
20.0	74.7	4.00	77.3	4.00	79.5	3.10	81.3	2.50	82.5	1.95
22.0	73.2	4.00	75.6	3.85	77.8	3.00	79.6	2.50	80.7	1.95
24.0	71.6	4.00	74.0	3.65	76.1	2.85	77.8	2.45	78.8	1.95
26.0	70.0	4.00	72.3	3.45	74.4	2.75	76.0	2.35	76.9	1.95
28.0	68.5	4.00	70.6	3.30	72.6	2.65	74.2	2.30	74.9	1.95
30.0	66.8	3.95	68.8	3.15	70.7	2.55	72.2	2.25	73.0	1.90
32.0	65.0	3.60	67.0	3.00	68.9	2.45	70.3	2.20	70.9	1.90
34.0	63.1	3.30	65.2	2.85	67.1	2.40	68.4	2.15	68.8	1.90
36.0	61.1	3.05	63.2	2.65	65.0	2.30	66.3	2.10	66.6	1.90
38.0	58.9	2.45	61.2	2.50	63.1	2.25	64.2	2.05	64.4	1.90
40.0	56.6	1.90	59.1	2.30	60.9	2.10	61.9	2.00		
42.0	54.0	1.30	56.7	1.75	58.7	1.95	59.6	1.85		
44.0			54.0	1.20	56.1	1.50	57.1	1.65		
46.0							54.1	1.05		
Critical boom angle (°)	52		53		53		53		63	
Standard hook	for 7.8 ton									
Hook mass	250kg									
Parts of line	1									

52m Boom + 20.8m SL Jib										
Specification SB1	Outriggers fully extended (8.4m) 360° full range, with 16ton counterweight mounted to crane									
Offset	2°		15°		30°		45°		60°	
Working radius (m)	Boom angle (°)	Load (ton)	Boom angle (°)	Load (ton)	Boom angle (°)	Load (ton)	Boom angle (°)	Load (ton)	Boom angle (°)	Load (ton)
10.0	82.7	3.00								
12.0	81.4	3.00								
14.0	80.1	3.00	83.6	2.90						
16.0	78.8	3.00	82.3	2.90						
18.0	77.5	3.00	80.9	2.90						
20.0	76.1	3.00	79.5	2.90	82.5	1.95				
22.0	74.7	3.00	78.0	2.70	81.0	1.95	83.5	1.50		
24.0	73.3	3.00	76.5	2.55	79.4	1.95	81.9	1.50		
26.0	71.9	3.00	74.9	2.40	77.9	1.85	80.3	1.50	81.9	1.15
28.0	70.5	3.00	73.4	2.30	76.2	1.75	78.6	1.50	80.1	1.15
30.0	69.0	2.85	71.7	2.15	74.6	1.70	76.9	1.45	78.2	1.15
32.0	67.4	2.70	70.1	2.05	72.9	1.60	75.1	1.40	76.4	1.15
34.0	65.7	2.50	68.4	1.95	71.1	1.55	73.3	1.35	74.4	1.15
36.0	64.0	2.35	66.8	1.85	69.4	1.50	71.4	1.30	72.3	1.10
38.0	62.3	2.25	65.0	1.75	67.6	1.45	69.5	1.30	70.3	1.10
40.0	60.5	2.10	63.2	1.70	65.8	1.40	67.5	1.25	68.1	1.10
42.0	58.8	2.00	61.4	1.60	63.9	1.35	65.5	1.25	65.9	1.10
44.0	56.6	1.65	59.5	1.55	61.9	1.30	63.4	1.20	63.5	1.10
46.0	54.2	1.15	57.6	1.50	59.8	1.25	61.2	1.20		
48.0			55.3	1.15	57.8	1.25	58.9	1.15		
50.0					55.5	1.10	56.5	1.15		
Critical boom angle (°)	53		54		54		54		63	
Standard hook	for 7.8 ton									
Hook mass	250kg									
Parts of line	1									

52m Boom + 26.6m SL Jib										
Specification SB1	Outriggers fully extended (8.4m) 360° full range, with 16ton counterweight mounted to crane									
Offset	2°		15°		30°		45°		60°	
Working radius (m)	Boom angle (°)	Load (ton)	Boom angle (°)	Load (ton)	Boom angle (°)	Load (ton)	Boom angle (°)	Load (ton)	Boom angle (°)	Load (ton)
12.0	82.2	2.00								
14.0	81.1	2.00								
16.0	79.9	2.00	84.1	1.85						
18.0	78.7	2.00	82.8	1.85						
20.0	77.5	2.00	81.6	1.85						
22.0	76.2	2.00	80.3	1.85	83.9	1.15				
24.0	75.0	2.00	78.9	1.75	82.5	1.15				
26.0	73.7	2.00	77.5	1.65	81.1	1.15				
28.0	72.4	2.00	76.1	1.60	79.7	1.15	82.8	0.85		
30.0	71.1	2.00	74.6	1.50	78.2	1.10	81.2	0.85	83.4	0.75
32.0	69.8	1.95	73.2	1.45	76.7	1.05	79.6	0.85	81.6	0.75
34.0	68.3	1.85	71.7	1.35	75.2	1.05	78.0	0.85	79.8	0.75
36.0	66.8	1.75	70.2	1.30	73.6	1.00	76.3	0.85	78.0	0.70
38.0	65.2	1.65	68.6	1.25	71.9	0.95	74.6	0.80	76.1	0.70
40.0	63.7	1.55	67.1	1.20	70.3	0.95	72.8	0.80	74.1	0.70
42.0	62.1	1.45	65.3	1.10	68.6	0.90	71.1	0.80	72.1	0.70
44.0	60.4	1.35	63.7	1.05	66.9	0.85	69.1	0.75	70.0	0.70
46.0	58.8	1.30	62.0	1.00	65.2	0.85	67.2	0.75	67.8	0.70
48.0	57.0	1.20	60.2	0.95	63.2	0.80	65.2	0.75	65.5	0.70
50.0	55.4	0.95	58.4	0.90	61.4	0.80	63.0	0.70		
52.0			56.6	0.90	59.3	0.75	60.8	0.70		
54.0					57.2	0.75	58.6	0.70		
56.0							56.1	0.70		
Critical boom angle (°)	54		55		55		55		63	
Standard hook	for 7.8 ton									
Hook mass	250kg									
Parts of line	1									

44m Boom + 9.2m SL Jib

Specification SC1 Outriggers fully extended (8.4m) 360° full range, with 8.5ton counterweight mounted to crane

Offset	5°		15°		30°		45°		60°	
Working radius (m)	Boom angle (°)	Load (ton)	Boom angle (°)	Load (ton)	Boom angle (°)	Load (ton)	Boom angle (°)	Load (ton)	Boom angle (°)	Load (ton)
7.0	82.3	7.00								
8.0	81.3	7.00	82.9	7.00						
9.0	80.4	7.00	81.9	7.00						
10.0	79.4	7.00	80.8	7.00	82.8	5.90				
12.0	77.4	7.00	78.9	7.00	80.7	5.90	82.2	4.80		
14.0	75.4	7.00	76.9	7.00	78.6	5.90	80.0	4.80	80.9	3.90
16.0	73.4	7.00	74.9	7.00	76.5	5.60	77.8	4.80	78.6	3.90
18.0	71.3	7.00	72.8	6.60	74.3	5.35	75.5	4.65	76.2	3.85
20.0	69.2	6.75	70.5	6.05	72.1	5.10	73.2	4.50	73.9	3.80
22.0	66.9	5.90	68.1	5.40	69.7	4.85	70.9	4.40	71.3	3.75
24.0	64.5	5.25	65.7	4.80	67.3	4.40	68.4	4.10	68.9	3.75
26.0	62.0	4.65	63.2	4.35	64.8	3.95	65.8	3.75	66.2	3.65
28.0	59.2	3.55	60.7	3.90	62.2	3.60	63.1	3.45	63.5	3.40
30.0	56.4	2.55	57.8	2.85	59.5	3.25	60.4	3.15		
32.0	53.5	1.70	54.8	1.95	56.4	2.30	57.4	2.50		
34.0					53.4	1.50	54.0	1.65		
Critical boom angle (°)	52		52		52		53		62	
Standard hook	for 7.8 ton									
Hook mass	250kg									
Parts of line	1									

44m Boom + 15.0m SL Jib

Specification SC1 Outriggers fully extended (8.4m) 360° full range, with 8.5ton counterweight mounted to crane

Offset	2°		15°		30°		45°		60°	
Working radius (m)	Boom angle (°)	Load (ton)	Boom angle (°)	Load (ton)	Boom angle (°)	Load (ton)	Boom angle (°)	Load (ton)	Boom angle (°)	Load (ton)
8.0	82.4	4.00								
9.0	81.5	4.00								
10.0	80.6	4.00								
12.0	78.8	4.00	81.9	4.00						
14.0	77.0	4.00	80.1	4.00	83.0	3.15				
16.0	75.3	4.00	78.3	4.00	81.1	3.15	83.4	2.55		
18.0	73.4	4.00	76.4	4.00	79.2	3.15	81.4	2.55	83.1	2.00
20.0	71.6	4.00	74.4	3.85	77.1	3.00	79.3	2.55	80.8	2.00
22.0	69.7	4.00	72.5	3.60	75.1	2.85	77.2	2.45	78.5	2.00
24.0	67.7	4.00	70.4	3.40	72.9	2.75	75.0	2.35	76.2	1.95
26.0	65.7	4.00	68.3	3.20	70.8	2.60	72.7	2.30	73.8	1.95
28.0	63.6	3.60	66.2	3.05	68.6	2.50	70.5	2.25	71.4	1.90
30.0	61.3	3.20	64.0	2.85	66.3	2.40	68.1	2.15	68.8	1.90
32.0	58.4	2.60	61.6	2.60	64.0	2.35	65.6	2.10	66.2	1.90
34.0	56.0	1.85	59.3	2.40	61.6	2.20	63.1	2.10	63.5	1.90
36.0	53.5	1.20	56.3	1.75	59.0	2.00	60.4	1.95		
38.0			53.7	1.10	56.0	1.50	57.6	1.75		
40.0							53.9	1.10		
Critical boom angle (°)	53		53		53		53		62	
Standard hook	for 7.8 ton									
Hook mass	250kg									
Parts of line	1									

44m Boom + 20.8m SL Jib

Specification SC1 Outriggers fully extended (8.4m) 360° full range, with 8.5ton counterweight mounted to crane

Offset	2°		15°		30°		45°		60°	
Working radius (m)	Boom angle (°)	Load (ton)	Boom angle (°)	Load (ton)	Boom angle (°)	Load (ton)	Boom angle (°)	Load (ton)	Boom angle (°)	Load (ton)
9.0	82.6	3.75								
10.0	81.8	3.75								
12.0	80.3	3.75								
14.0	78.7	3.75	82.4	2.90						
16.0	77.1	3.75	80.8	2.90						
18.0	75.5	3.75	79.1	2.90	82.7	1.95				
20.0	73.9	3.75	77.3	2.75	81.0	1.95				
22.0	72.1	3.45	75.5	2.55	79.2	1.95	82.2	1.50		
24.0	70.3	3.20	73.7	2.40	77.3	1.85	80.3	1.50	82.4	1.20
26.0	68.5	2.95	71.8	2.25	75.3	1.75	78.2	1.50	80.1	1.20
28.0	66.6	2.75	69.9	2.10	73.4	1.70	76.2	1.45	77.9	1.20
30.0	64.7	2.55	68.0	2.00	71.4	1.60	74.1	1.40	75.7	1.15
32.0	62.7	2.40	66.0	1.90	69.3	1.55	71.8	1.35	73.2	1.15
34.0	60.7	2.20	64.0	1.80	67.3	1.50	69.6	1.30	70.8	1.15
36.0	58.7	2.05	61.9	1.70	65.0	1.40	67.4	1.30	68.2	1.15
38.0	56.2	1.50	59.7	1.60	62.8	1.35	64.9	1.25	65.5	1.10
40.0			57.5	1.55	60.5	1.30	62.3	1.20	62.8	1.10
42.0					58.1	1.30	59.8	1.20		
44.0					55.4	1.00	57.0	1.20		
Critical boom angle (°)	55		55		55		56		62	
Standard hook	for 7.8 ton									
Hook mass	250kg									
Parts of line	1									

44m Boom + 26.6m SL Jib

Specification SC1 Outriggers fully extended (8.4m) 360° full range, with 8.5ton counterweight mounted to crane

Offset	2°		15°		30°		45°		60°	
Working radius (m)	Boom angle (°)	Load (ton)	Boom angle (°)	Load (ton)	Boom angle (°)	Load (ton)	Boom angle (°)	Load (ton)	Boom angle (°)	Load (ton)
10.0	82.6	2.20								
12.0	81.3	2.20								
14.0	79.8	2.20								
16.0	78.5	2.20	83.2	1.90						
18.0	77.0	2.20	81.7	1.90						
20.0	75.6	2.20	80.1	1.90						
22.0	74.1	2.20	78.6	1.80	83.0	1.20				
24.0	72.6	2.20	77.0	1.70	81.3	1.20				
26.0	71.2	2.20	75.3	1.60	79.7	1.20	83.3	0.90		
28.0	69.5	2.05	73.6	1.50	77.9	1.15	81.5	0.90		
30.0	67.8	1.90	71.8	1.40	76.0	1.10	79.6	0.90	82.1	0.75
32.0	66.0	1.75	70.1	1.35	74.2	1.05	77.6	0.85	80.0	0.75
34.0	64.3	1.65	68.2	1.25	72.4	1.00	75.6	0.85	77.7	0.75
36.0	62.5	1.55	66.4	1.20	70.4	0.95	73.5	0.80	75.4	0.70
38.0	60.5	1.45	64.5	1.15	68.6	0.95	71.4	0.80	73.0	0.70
40.0	58.7	1.35	62.6	1.10	66.5	0.90	69.2	0.80	70.6	0.70
42.0	56.7	1.20	60.6	1.00	64.3	0.85	66.9	0.75	67.9	0.70
44.0			58.5	0.95	62.2	0.80	64.6	0.75	65.2	0.70
46.0			56.4	0.90	59.9	0.80	62.1	0.75		
48.0					57.5	0.75	59.4	0.70		
Critical boom angle (°)	55		56		57		58		62	
Standard hook	for 7.8 ton									
Hook mass	250kg									
Parts of line	1									

48m Boom + 9.2m SL Jib

Specification SC1 Outriggers fully extended (8.4m) 360° full range, with 8.5ton counterweight mounted to crane

Offset	5°		15°		30°		45°		60°	
Working radius (m)	Boom angle (°)	Load (ton)	Boom angle (°)	Load (ton)	Boom angle (°)	Load (ton)	Boom angle (°)	Load (ton)	Boom angle (°)	Load (ton)
7.0	82.9	6.00								
8.0	81.9	6.00								
9.0	81.1	6.00	82.5	6.00						
10.0	80.2	6.00	81.6	6.00						
12.0	78.4	6.00	79.8	6.00	81.7	5.90	82.9	4.80		
14.0	76.7	6.00	78.0	6.00	79.8	5.90	81.0	4.80	81.8	3.85
16.0	74.9	6.00	76.2	6.00	77.9	5.75	79.1	4.80	79.7	3.85
18.0	72.9	6.00	74.3	6.00	76.0	5.50	77.1	4.75	77.6	3.85
20.0	71.1	6.00	72.4	6.00	73.9	5.25	75.0	4.60	75.5	3.80
22.0	69.2	6.00	70.5	6.00	71.8	5.05	72.8	4.45	73.3	3.80
24.0	67.3	6.00	68.5	5.80	69.8	4.85	70.7	4.35	71.1	3.75
26.0	65.0	4.90	66.3	5.30	67.6	4.65	68.5	4.25	68.8	3.75
28.0	62.7	3.70	63.6	4.10	65.4	4.45	66.2	4.10	66.5	3.70
30.0	60.3	2.70	61.2	3.05	62.7	3.45	63.8	3.70	63.9	3.70
32.0	57.6	1.85	58.8	2.15	60.1	2.50	60.6	2.75		
34.0					57.6	1.70	58.0	1.90		
Critical boom angle (°)	56		57		57		57		62	
Standard hook	for 7.8 ton									
Hook mass	250kg									
Parts of line	1									

48m Boom + 15.0m SL Jib

Specification SC1 Outriggers fully extended (8.4m) 360° full range, with 8.5ton counterweight mounted to crane

Offset	2°		15°		30°		45°		60°	
Working radius (m)	Boom angle (°)	Load (ton)	Boom angle (°)	Load (ton)	Boom angle (°)	Load (ton)	Boom angle (°)	Load (ton)	Boom angle (°)	Load (ton)
8.0	83.0	4.00								
9.0	82.2	4.00								
10.0	81.4	4.00								
12.0	79.8	4.00	82.7	4.00						
14.0	78.2	4.00	81.0	4.00	83.6	3.15				
16.0	76.5	4.00	79.4	4.00	81.9	3.15				
18.0	74.9	4.00	77.7	4.00	80.2	3.15	82.3	2.50		
20.0	73.2	4.00	75.9	3.95	78.4	3.05	80.4	2.50	81.7	2.00
22.0	71.5	4.00	74.2	3.75	76.6	2.95	78.4	2.50	79.7	2.00
24.0	69.8	4.00	72.3	3.50	74.6	2.80	76.5	2.40	77.6	1.95
26.0	68.0	4.00	70.4	3.35	72.7	2.70	74.5	2.35	75.5	1.95
28.0	66.2	4.00	68.5	3.15	70.7	2.60	72.4	2.25	73.2	1.90
30.0	64.3	3.55	66.5	3.00	68.7	2.50	70.3	2.20	71.1	1.90
32.0	61.8	2.70	64.4	2.85	66.6	2.40	68.1	2.15	68.7	1.90
34.0	59.5	1.95	62.4	2.55	64.4	2.30	65.9	2.10	66.3	1.90
36.0			59.6	1.85	62.3	2.25	63.5	2.05	63.8	1.90
38.0					59.4	1.65	61.2	1.95		
40.0							58.2	1.30		
Critical boom angle (°)	57		57		57		57		62	
Standard hook	for 7.8 ton									
Hook mass	250kg									
Parts of line	1									

Super luffing jib (Operation of SL jib)

48m Boom + 20.8m SL Jib										
Specification SC1	Outriggers fully extended (8.4m) 360° full range, with 8.5ton counterweight mounted to crane									
Offset	2°		15°		30°		45°		60°	
Working radius (m)	Boom angle (°)	Load (ton)	Boom angle (°)	Load (ton)	Boom angle (°)	Load (ton)	Boom angle (°)	Load (ton)	Boom angle (°)	Load (ton)
9.0	83.1	3.50								
10.0	82.3	3.50								
12.0	80.9	3.50								
14.0	79.5	3.50	83.1	2.90						
16.0	78.0	3.50	81.6	2.90						
18.0	76.6	3.50	80.0	2.90	83.4	1.95				
20.0	75.1	3.50	78.4	2.80	81.8	1.95				
22.0	73.7	3.50	76.9	2.65	80.1	1.95	82.9	1.50		
24.0	72.0	3.35	75.2	2.50	78.4	1.90	81.1	1.50	83.0	1.20
26.0	70.4	3.10	73.4	2.35	76.6	1.80	79.3	1.50	81.2	1.20
28.0	68.6	2.90	71.7	2.20	74.9	1.75	77.4	1.45	79.1	1.20
30.0	66.9	2.70	70.0	2.10	73.1	1.65	75.5	1.40	77.0	1.15
32.0	65.1	2.55	68.1	1.95	71.2	1.60	73.5	1.35	74.9	1.15
34.0	63.3	2.35	66.2	1.85	69.3	1.50	71.6	1.35	72.7	1.15
36.0	61.3	2.10	64.5	1.80	67.4	1.45	69.4	1.30	70.4	1.10
38.0	59.3	1.50	62.5	1.70	65.3	1.40	67.3	1.25	68.1	1.10
40.0			60.5	1.60	63.3	1.35	65.1	1.25	65.6	1.10
42.0					61.2	1.30	62.8	1.20	63.1	1.10
44.0					58.8	1.10	60.5	1.20		
Critical boom angle (°)	58		58		58		59		62	
Standard hook	for 7.8 ton									
Hook mass	250kg									
Parts of line	1									

48m Boom + 26.6m SL Jib										
Specification SC1	Outriggers fully extended (8.4m) 360° full range, with 8.5ton counterweight mounted to crane									
Offset	2°		15°		30°		45°		60°	
Working radius (m)	Boom angle (°)	Load (ton)	Boom angle (°)	Load (ton)	Boom angle (°)	Load (ton)	Boom angle (°)	Load (ton)	Boom angle (°)	Load (ton)
10.0	83.1	2.10								
12.0	81.8	2.10								
14.0	80.5	2.10								
16.0	79.2	2.10	83.7	1.85						
18.0	77.9	2.10	82.3	1.85						
20.0	76.5	2.10	80.8	1.85						
22.0	75.2	2.10	79.5	1.85	83.5	1.20				
24.0	73.9	2.10	78.0	1.75	82.0	1.20				
26.0	72.4	2.10	76.4	1.65	80.4	1.20	83.9	0.90		
28.0	71.1	2.10	74.9	1.55	78.9	1.15	82.2	0.90		
30.0	69.6	2.00	73.3	1.45	77.3	1.10	80.5	0.90	82.8	0.75
32.0	68.0	1.85	71.7	1.40	75.6	1.05	78.6	0.85	80.9	0.75
34.0	66.3	1.75	70.0	1.30	73.8	1.00	76.8	0.85	78.8	0.75
36.0	64.7	1.65	68.4	1.25	72.1	1.00	75.0	0.80	76.7	0.70
38.0	63.0	1.55	66.6	1.20	70.3	0.95	73.1	0.80	74.7	0.70
40.0	61.2	1.45	64.9	1.15	68.4	0.90	71.2	0.80	72.4	0.70
42.0	59.2	1.05	63.1	1.05	66.7	0.90	69.2	0.80	70.1	0.70
44.0			61.2	1.00	64.6	0.85	67.0	0.75	67.7	0.70
46.0					62.7	0.80	64.8	0.75	65.2	0.70
48.0					60.6	0.80	62.6	0.75	62.5	0.70
Critical boom angle (°)	58		60		60		61		62	
Standard hook	for 7.8 ton									
Hook mass	250kg									
Parts of line	1									

52m Boom + 9.2m SL Jib										
Specification SC1	Outriggers fully extended (8.4m) 360° full range, with 8.5ton counterweight mounted to crane									
Offset	5°		15°		30°		45°		60°	
Working radius (m)	Boom angle (°)	Load (ton)	Boom angle (°)	Load (ton)	Boom angle (°)	Load (ton)	Boom angle (°)	Load (ton)	Boom angle (°)	Load (ton)
8.0	82.5	5.20								
9.0	81.7	5.20								
10.0	80.9	5.20	82.2	5.20						
12.0	79.3	5.20	80.6	5.20	82.3	5.20				
14.0	77.7	5.20	79.0	5.20	80.7	5.20	81.9	4.80	82.5	3.85
16.0	76.0	5.20	77.3	5.20	79.0	5.20	80.2	4.80	80.7	3.85
18.0	74.4	5.20	75.6	5.20	77.3	5.20	78.4	4.80	78.9	3.85
20.0	72.7	5.20	73.9	5.20	75.6	5.20	76.6	4.65	77.0	3.85
22.0	71.0	5.20	72.2	5.20	73.8	5.15	74.6	4.55	75.0	3.80
24.0	69.3	5.20	70.5	5.20	71.9	4.90	72.7	4.40	73.1	3.75
26.0	67.5	5.05	68.6	5.15	69.9	4.55	70.7	4.20	71.0	3.75
28.0	65.2	3.85	66.6	4.25	67.8	4.20	68.6	3.90	68.9	3.70
30.0	63.0	2.85	64.1	3.20	65.3	3.90	66.5	3.65	66.8	3.55
32.0	60.8	2.00	62.0	2.30	63.1	2.85	64.0	3.05	64.5	3.25
34.0			59.4	1.55	60.8	1.95	61.6	2.15		
Critical boom angle (°)	59		59		59		59		63	
Standard hook	for 7.8 ton									
Hook mass	250kg									
Parts of line	1									

52m Boom + 15.0m SL Jib										
Specification SC1	Outriggers fully extended (8.4m) 360° full range, with 8.5ton counterweight mounted to crane									
Offset	2°		15°		30°		45°		60°	
Working radius (m)	Boom angle (°)	Load (ton)	Boom angle (°)	Load (ton)	Boom angle (°)	Load (ton)	Boom angle (°)	Load (ton)	Boom angle (°)	Load (ton)
9.0	82.8	4.00								
10.0	82.1	4.00								
12.0	80.6	4.00	83.3	4.00						
14.0	79.1	4.00	81.8	4.00						
16.0	77.7	4.00	80.3	4.00	82.6	3.10				
18.0	76.2	4.00	78.8	4.00	81.1	3.10	83.0	2.50		
20.0	74.7	4.00	77.3	4.00	79.5	3.10	81.3	2.50	82.5	1.95
22.0	73.2	4.00	75.6	3.85	77.8	3.00	79.6	2.50	80.7	1.95
24.0	71.6	4.00	74.0	3.65	76.1	2.85	77.8	2.45	78.8	1.95
26.0	70.0	4.00	72.3	3.45	74.4	2.75	76.0	2.35	76.9	1.95
28.0	68.5	4.00	70.6	3.30	72.6	2.65	74.2	2.30	74.9	1.95
30.0	66.8	3.65	68.8	3.15	70.7	2.55	72.2	2.25	73.0	1.90
32.0	64.6	2.80	67.0	3.00	68.9	2.45	70.3	2.20	70.9	1.90
34.0	62.6	2.05	65.2	2.65	67.1	2.40	68.4	2.15	68.8	1.90
36.0	60.4	1.40	62.8	1.95	65.0	2.30	66.3	2.10	66.6	1.90
38.0			60.7	1.30	62.8	1.80	64.2	2.05	64.4	1.90
40.0					60.4	1.20	61.6	1.45		
Critical boom angle (°)	59		60		60		60		63	
Standard hook	for 7.8 ton									
Hook mass	250kg									
Parts of line	1									

52m Boom + 20.8m SL Jib										
Specification SC1	Outriggers fully extended (8.4m) 360° full range, with 8.5ton counterweight mounted to crane									
Offset	2°		15°		30°		45°		60°	
Working radius (m)	Boom angle (°)	Load (ton)	Boom angle (°)	Load (ton)	Boom angle (°)	Load (ton)	Boom angle (°)	Load (ton)	Boom angle (°)	Load (ton)
10.0	82.7	3.00								
12.0	81.4	3.00								
14.0	80.1	3.00	83.6	2.90						
16.0	78.8	3.00	82.3	2.90						
18.0	77.5	3.00	80.9	2.90						
20.0	76.1	3.00	79.5	2.90	82.5	1.95				
22.0	74.7	3.00	78.0	2.70	81.0	1.95	83.5	1.50		
24.0	73.3	3.00	76.5	2.55	79.4	1.95	81.9	1.50		
26.0	71.9	3.00	74.9	2.40	77.9	1.85	80.3	1.50	81.9	1.15
28.0	70.5	3.00	73.4	2.30	76.2	1.75	78.6	1.50	80.1	1.15
30.0	69.0	2.85	71.7	2.15	74.6	1.70	76.9	1.45	78.2	1.15
32.0	66.6	2.70	70.1	2.05	72.9	1.60	75.1	1.40	76.4	1.15
34.0	64.8	2.50	68.4	1.95	71.1	1.55	73.3	1.35	74.4	1.15
36.0	63.0	2.15	66.8	1.85	69.4	1.50	71.4	1.30	72.3	1.10
38.0	61.1	1.55	64.6	1.75	67.6	1.45	69.5	1.30	70.3	1.10
40.0			62.7	1.65	65.8	1.40	67.5	1.25	68.1	1.10
42.0					63.4	1.35	65.5	1.25	65.9	1.10
44.0					61.4	1.20	63.4	1.20	63.5	1.10
Critical boom angle (°)	60		61		61		63		63	
Standard hook	for 7.8 ton									
Hook mass	250kg									
Parts of line	1									

52m Boom + 26.6m SL Jib										
Specification SC1	Outriggers fully extended (8.4m) 360° full range, with 8.5ton counterweight mounted to crane									
Offset	2°		15°		30°		45°		60°	
Working radius (m)	Boom angle (°)	Load (ton)	Boom angle (°)	Load (ton)	Boom angle (°)	Load (ton)	Boom angle (°)	Load (ton)	Boom angle (°)	Load (ton)
12.0	82.2	2.00								
14.0	81.1	2.00								
16.0	79.9	2.00	84.1	1.85						
18.0	78.7	2.00	82.8	1.85						
20.0	77.5	2.00	81.6	1.85						
22.0	76.2	2.00	80.3	1.85	83.9	1.15				
24.0	75.0	2.00	78.9	1.75	82.5	1.15				
26.0	73.7	2.00	77.5	1.65	81.1	1.15				
28.0	72.4	2.00	76.1	1.60	79.7	1.15	82.8	0.85		
30.0	71.1	2.00	74.6	1.50	78.2	1.10	81.2	0.85	83.4	0.75
32.0	69.8	1.95	73.2	1.45	76.7	1.05	79.6	0.85	81.6	0.75
34.0	68.3	1.85	71.7	1.35	75.2	1.05	78.0	0.85	79.8	0.75
36.0	66.8	1.75	70.2	1.30	73.6	1.00	76.3	0.85	78.0	0.70
38.0	65.2	1.65	68.6	1.25	71.9	0.95	74.6	0.80	76.1	0.70
40.0	63.7	1.55	67.1	1.20	70.3	0.95	72.8	0.80	74.1	0.70
42.0			65.3	1.10	68.6	0.90	71.1	0.80	72.1	0.70
44.0			63.7	1.05	66.9	0.85	69.1	0.75	70.0	0.70
46.0					65.2	0.85	67.2	0.75	67.8	0.70
48.0					63.2	0.80	65.2	0.75	65.5	0.70
Critical boom angle (°)	62		62		62		63		63	
Standard hook	for 7.8 ton									
Hook mass	250kg									
Parts of line	1									

44m Boom + 9.2m SL Jib

Specification SD1 Outriggers fully extended (8.4m) 360° full range, with 24ton or 16ton counterweight stowed in carrier

Offset	5°		15°		30°		45°		60°	
Working radius (m)	Boom angle (°)	Load (ton)	Boom angle (°)	Load (ton)	Boom angle (°)	Load (ton)	Boom angle (°)	Load (ton)	Boom angle (°)	Load (ton)
7.0	82.3	7.00								
8.0	81.3	7.00	82.9	7.00						
9.0	80.4	7.00	81.9	7.00						
10.0	79.4	7.00	80.8	7.00	82.8	5.90				
12.0	77.4	7.00	78.9	7.00	80.7	5.90	82.2	4.80		
14.0	75.4	7.00	76.9	7.00	78.6	5.90	80.0	4.80	80.9	3.90
16.0	73.4	7.00	74.9	7.00	76.5	5.60	77.8	4.80	78.6	3.90
18.0	71.3	7.00	72.8	6.60	74.3	5.35	75.5	4.65	76.2	3.85
20.0	69.2	6.75	70.5	6.05	72.1	5.10	73.2	4.50	73.9	3.80
22.0	66.9	5.85	68.1	5.40	69.7	4.85	70.9	4.40	71.3	3.75
24.0	64.3	4.30	65.7	4.75	67.3	4.40	68.4	4.10	68.9	3.75
26.0	61.4	3.05	63.0	3.45	64.8	3.95	65.8	3.75	66.2	3.65
28.0			60.2	2.40	62.0	2.80	63.1	3.10	63.5	3.20
30.0							60.0	2.10		
Critical boom angle (°)	59		59		59		59		62	
Standard hook	for 7.8 ton									
Hook mass	250kg									
Parts of line	1									

44m Boom + 15.0m SL Jib

Specification SD1 Outriggers fully extended (8.4m) 360° full range, with 24ton or 16ton counterweight stowed in carrier

Offset	2°		15°		30°		45°		60°	
Working radius (m)	Boom angle (°)	Load (ton)	Boom angle (°)	Load (ton)	Boom angle (°)	Load (ton)	Boom angle (°)	Load (ton)	Boom angle (°)	Load (ton)
8.0	82.4	4.00								
9.0	81.5	4.00								
10.0	80.6	4.00								
12.0	78.8	4.00	81.9	4.00						
14.0	77.0	4.00	80.1	4.00	83.0	3.15				
16.0	75.3	4.00	78.3	4.00	81.1	3.15	83.4	2.55		
18.0	73.4	4.00	76.4	4.00	79.2	3.15	81.4	2.55	83.1	2.00
20.0	71.6	4.00	74.4	3.85	77.1	3.00	79.3	2.55	80.8	2.00
22.0	69.7	4.00	72.5	3.60	75.1	2.85	77.2	2.45	78.5	2.00
24.0	67.7	4.00	70.4	3.40	72.9	2.75	75.0	2.35	76.2	1.95
26.0	65.7	4.00	68.3	3.20	70.8	2.60	72.7	2.30	73.8	1.95
28.0	63.5	2.95	66.2	3.05	68.6	2.50	70.5	2.25	71.4	1.90
30.0	60.9	2.10	64.0	2.75	66.3	2.40	68.1	2.15	68.8	1.90
32.0					64.0	2.35	65.6	2.10	66.2	1.90
34.0							63.1	2.10	63.5	1.90
Critical boom angle (°)	60		61		61		61		61	
Standard hook	for 7.8 ton									
Hook mass	250kg									
Parts of line	1									

44m Boom + 20.8m SL Jib

Specification SD1 Outriggers fully extended (8.4m) 360° full range, with 24ton or 16ton counterweight stowed in carrier

Offset	2°		15°		30°		45°		60°	
Working radius (m)	Boom angle (°)	Load (ton)	Boom angle (°)	Load (ton)	Boom angle (°)	Load (ton)	Boom angle (°)	Load (ton)	Boom angle (°)	Load (ton)
9.0	82.6	3.75								
10.0	81.8	3.75								
12.0	80.3	3.75								
14.0	78.7	3.75	82.4	2.90						
16.0	77.1	3.75	80.8	2.90						
18.0	75.5	3.75	79.1	2.90	82.7	1.95				
20.0	73.9	3.75	77.3	2.75	81.0	1.95				
22.0	72.1	3.45	75.5	2.55	79.2	1.95	82.2	1.50		
24.0	70.3	3.20	73.7	2.40	77.3	1.85	80.3	1.50	82.4	1.20
26.0	68.5	2.95	71.8	2.25	75.3	1.75	78.2	1.50	80.1	1.20
28.0	66.6	2.75	69.9	2.10	73.4	1.70	76.2	1.45	77.9	1.20
30.0	64.7	2.55	68.0	2.00	71.4	1.60	74.1	1.40	75.7	1.15
32.0	62.7	2.25	66.0	1.90	69.3	1.55	71.8	1.35	73.2	1.15
34.0			64.0	1.80	67.3	1.50	69.6	1.30	70.8	1.15
36.0			61.9	1.70	65.0	1.40	67.4	1.30	68.2	1.15
38.0					62.8	1.35	64.9	1.25	65.5	1.10
40.0									62.8	1.10
Critical boom angle (°)	61		61		62		62		62	
Standard hook	for 7.8 ton									
Hook mass	250kg									
Parts of line	1									

44m Boom + 26.6m SL Jib

Specification SD1 Outriggers fully extended (8.4m) 360° full range, with 24ton or 16ton counterweight stowed in carrier

Offset	2°		15°		30°		45°		60°	
Working radius (m)	Boom angle (°)	Load (ton)	Boom angle (°)	Load (ton)	Boom angle (°)	Load (ton)	Boom angle (°)	Load (ton)	Boom angle (°)	Load (ton)
10.0	82.6	2.20								
12.0	81.3	2.20								
14.0	79.8	2.20								
16.0	78.5	2.20	83.2	1.90						
18.0	77.0	2.20	81.7	1.90						
20.0	75.6	2.20	80.1	1.90						
22.0	74.1	2.20	78.6	1.80	83.0	1.20				
24.0	72.6	2.20	77.0	1.70	81.3	1.20				
26.0	71.2	2.20	75.3	1.60	79.7	1.20	83.3	0.90		
28.0	69.5	2.05	73.6	1.50	77.9	1.15	81.5	0.90		
30.0	67.8	1.90	71.8	1.40	76.0	1.10	79.6	0.90	82.1	0.75
32.0	66.0	1.75	70.1	1.35	74.2	1.05	77.6	0.85	80.0	0.75
34.0	64.3	1.65	68.2	1.25	72.4	1.00	75.6	0.85	77.7	0.75
36.0	62.5	1.55	66.4	1.20	70.4	0.95	73.5	0.80	75.4	0.70
38.0			64.5	1.15	68.6	0.95	71.4	0.80	73.0	0.70
40.0					66.5	0.90	69.2	0.80	70.6	0.70
42.0					64.3	0.85	66.9	0.75	67.9	0.70
44.0							64.6	0.75	65.2	0.70
Critical boom angle (°)	62		63		63		63		63	
Standard hook	for 7.8 ton									
Hook mass	250kg									
Parts of line	1									

48m Boom + 9.2m SL Jib

Specification SD1 Outriggers fully extended (8.4m) 360° full range, with 24ton or 16ton counterweight stowed in carrier

Offset	5°		15°		30°		45°		60°	
Working radius (m)	Boom angle (°)	Load (ton)	Boom angle (°)	Load (ton)	Boom angle (°)	Load (ton)	Boom angle (°)	Load (ton)	Boom angle (°)	Load (ton)
7.0	82.9	6.00								
8.0	81.9	6.00								
9.0	81.1	6.00	82.5	6.00						
10.0	80.2	6.00	81.6	6.00						
12.0	78.4	6.00	79.8	6.00	81.7	5.90	82.9	4.80		
14.0	76.7	6.00	78.0	6.00	79.8	5.90	81.0	4.80	81.8	3.85
16.0	74.9	6.00	76.2	6.00	77.9	5.75	79.1	4.80	79.7	3.85
18.0	72.9	6.00	74.3	6.00	76.0	5.50	77.1	4.75	77.6	3.85
20.0	71.1	6.00	72.4	6.00	73.9	5.25	75.0	4.60	75.5	3.80
22.0	69.2	6.00	70.5	6.00	71.8	5.05	72.8	4.45	73.3	3.80
24.0	66.8	4.55	68.3	5.00	69.8	4.85	70.7	4.35	71.1	3.75
26.0	64.3	3.30	65.7	3.70	67.5	4.20	68.5	4.25	68.8	3.75
28.0			62.9	2.60	64.9	3.05	66.0	3.35	66.5	3.45
30.0							63.3	2.30	63.5	2.40
Critical boom angle (°)	62		62		62		62		62	
Standard hook	for 7.8 ton									
Hook mass	250kg									
Parts of line	1									

48m Boom + 15.0m SL Jib

Specification SD1 Outriggers fully extended (8.4m) 360° full range, with 24ton or 16ton counterweight stowed in carrier

Offset	2°		15°		30°		45°		60°	
Working radius (m)	Boom angle (°)	Load (ton)	Boom angle (°)	Load (ton)	Boom angle (°)	Load (ton)	Boom angle (°)	Load (ton)	Boom angle (°)	Load (ton)
8.0	83.0	4.00								
9.0	82.2	4.00								
10.0	81.4	4.00								
12.0	79.8	4.00	82.7	4.00						
14.0	78.2	4.00	81.0	4.00	83.6	3.15				
16.0	76.5	4.00	79.4	4.00	81.9	3.15				
18.0	74.9	4.00	77.7	4.00	80.2	3.15	82.3	2.50		
20.0	73.2	4.00	75.9	3.95	78.4	3.05	80.4	2.50	81.7	2.00
22.0	71.5	4.00	74.2	3.75	76.6	2.95	78.4	2.50	79.7	2.00
24.0	69.8	4.00	72.3	3.50	74.6	2.80	76.5	2.40	77.6	1.95
26.0	68.0	4.00	70.4	3.35	72.7	2.70	74.5	2.35	75.5	1.95
28.0	65.9	3.10	68.5	3.15	70.7	2.60	72.4	2.25	73.2	1.90
30.0	63.7	2.25	66.5	2.90	68.7	2.50	70.3	2.20	71.1	1.90
32.0					66.6	2.40	68.1	2.15	68.7	1.90
34.0							65.9	2.10	66.3	1.90
Critical boom angle (°)	63		64		64		64		64	
Standard hook	for 7.8 ton									
Hook mass	250kg									
Parts of line	1									

Super luffing jib (Operation of SL jib)

48m Boom + 20.8m SL Jib										
Specification SD1	Outriggers fully extended (8.4m) 360° full range, with 24ton or 16ton counterweight stowed in carrier									
Offset	2°		15°		30°		45°		60°	
Working radius (m)	Boom angle (°)	Load (ton)	Boom angle (°)	Load (ton)	Boom angle (°)	Load (ton)	Boom angle (°)	Load (ton)	Boom angle (°)	Load (ton)
9.0	83.1	3.50								
10.0	82.3	3.50								
12.0	80.9	3.50								
14.0	79.5	3.50	83.1	2.90						
16.0	78.0	3.50	81.6	2.90						
18.0	76.6	3.50	80.0	2.90	83.4	1.95				
20.0	75.1	3.50	78.4	2.80	81.8	1.95				
22.0	73.7	3.50	76.9	2.65	80.1	1.95	82.9	1.50		
24.0	72.0	3.35	75.2	2.50	78.4	1.90	81.1	1.50	83.0	1.20
26.0	70.4	3.10	73.4	2.35	76.6	1.80	79.3	1.50	81.2	1.20
28.0	68.6	2.90	71.7	2.20	74.9	1.75	77.4	1.45	79.1	1.20
30.0	66.9	2.70	70.0	2.10	73.1	1.65	75.5	1.40	77.0	1.15
32.0	65.1	2.35	68.1	1.95	71.2	1.60	73.5	1.35	74.9	1.15
34.0			66.2	1.85	69.3	1.50	71.6	1.35	72.7	1.15
36.0			64.5	1.80	67.4	1.45	69.4	1.30	70.4	1.10
38.0							67.3	1.25	68.1	1.10
40.0									65.6	1.10
Critical boom angle (°)	64		64		65		65		65	
Standard hook	for 7.8 ton									
Hook mass	250kg									
Parts of line	1									

48m Boom + 26.6m SL Jib										
Specification SD1	Outriggers fully extended (8.4m) 360° full range, with 24ton or 16ton counterweight stowed in carrier									
Offset	2°		15°		30°		45°		60°	
Working radius (m)	Boom angle (°)	Load (ton)	Boom angle (°)	Load (ton)	Boom angle (°)	Load (ton)	Boom angle (°)	Load (ton)	Boom angle (°)	Load (ton)
10.0	83.1	2.10								
12.0	81.8	2.10								
14.0	80.5	2.10								
16.0	79.2	2.10	83.7	1.85						
18.0	77.9	2.10	82.3	1.85						
20.0	76.5	2.10	80.8	1.85						
22.0	75.2	2.10	79.5	1.85	83.5	1.20				
24.0	73.9	2.10	78.0	1.75	82.0	1.20				
26.0	72.4	2.10	76.4	1.65	80.4	1.20	83.9	0.90		
28.0	71.1	2.10	74.9	1.55	78.9	1.15	82.2	0.90		
30.0	69.6	2.00	73.3	1.45	77.3	1.10	80.5	0.90	82.8	0.75
32.0	68.0	1.85	71.7	1.40	75.6	1.05	78.6	0.85	80.9	0.75
34.0	66.3	1.75	70.0	1.30	73.8	1.00	76.8	0.85	78.8	0.75
36.0			68.4	1.25	72.1	1.00	75.0	0.80	76.7	0.70
38.0			66.6	1.20	70.3	0.95	73.1	0.80	74.7	0.70
40.0					68.4	0.90	71.2	0.80	72.4	0.70
42.0					66.7	0.90	69.2	0.80	70.1	0.70
44.0							67.0	0.75	67.7	0.70
Critical boom angle (°)	65		66		66		66		66	
Standard hook	for 7.8 ton									
Hook mass	250kg									
Parts of line	1									

52m Boom + 9.2m SL Jib										
Specification SD1	Outriggers fully extended (8.4m) 360° full range, with 24ton or 16ton counterweight stowed in carrier									
Offset	5°		15°		30°		45°		60°	
Working radius (m)	Boom angle (°)	Load (ton)	Boom angle (°)	Load (ton)	Boom angle (°)	Load (ton)	Boom angle (°)	Load (ton)	Boom angle (°)	Load (ton)
8.0	82.5	5.20								
9.0	81.7	5.20								
10.0	80.9	5.20	82.2	5.20						
12.0	79.3	5.20	80.6	5.20	82.3	5.20				
14.0	77.7	5.20	79.0	5.20	80.7	5.20	81.9	4.80	82.5	3.85
16.0	76.0	5.20	77.3	5.20	79.0	5.20	80.2	4.80	80.7	3.85
18.0	74.4	5.20	75.6	5.20	77.3	5.20	78.4	4.80	78.9	3.85
20.0	72.7	5.20	73.9	5.20	75.6	5.20	76.6	4.65	77.0	3.85
22.0	71.0	5.20	72.2	5.20	73.8	5.15	74.6	4.55	75.0	3.80
24.0	69.2	4.70	70.5	5.15	71.9	4.90	72.7	4.40	73.1	3.75
26.0	66.9	3.45	68.2	3.85	69.9	4.35	70.7	4.20	71.0	3.75
28.0			66.0	2.75	67.5	3.20	68.5	3.55	68.9	3.70
30.0							66.1	2.50	66.5	2.65
Critical boom angle (°)	65		65		65		65		65	
Standard hook	for 7.8 ton									
Hook mass	250kg									
Parts of line	1									

52m Boom + 15.0m SL Jib										
Specification SD1	Outriggers fully extended (8.4m) 360° full range, with 24ton or 16ton counterweight stowed in carrier									
Offset	2°		15°		30°		45°		60°	
Working radius (m)	Boom angle (°)	Load (ton)	Boom angle (°)	Load (ton)	Boom angle (°)	Load (ton)	Boom angle (°)	Load (ton)	Boom angle (°)	Load (ton)
9.0	82.8	4.00								
10.0	82.1	4.00								
12.0	80.6	4.00	83.3	4.00						
14.0	79.1	4.00	81.8	4.00						
16.0	77.7	4.00	80.3	4.00	82.6	3.10				
18.0	76.2	4.00	78.8	4.00	81.1	3.10	83.0	2.50		
20.0	74.7	4.00	77.3	4.00	79.5	3.10	81.3	2.50	82.5	1.95
22.0	73.2	4.00	75.6	3.85	77.8	3.00	79.6	2.50	80.7	1.95
24.0	71.6	4.00	74.0	3.65	76.1	2.85	77.8	2.45	78.8	1.95
26.0	70.0	4.00	72.3	3.45	74.4	2.75	76.0	2.35	76.9	1.95
28.0	68.3	3.25	70.6	3.30	72.6	2.65	74.2	2.30	74.9	1.95
30.0			68.8	3.05	70.7	2.55	72.2	2.25	73.0	1.90
32.0					68.9	2.45	70.3	2.20	70.9	1.90
34.0							68.4	2.15	68.8	1.90
Critical boom angle (°)	66		67		67		67		67	
Standard hook	for 7.8 ton									
Hook mass	250kg									
Parts of line	1									

52m Boom + 20.8m SL Jib										
Specification SD1	Outriggers fully extended (8.4m) 360° full range, with 24ton or 16ton counterweight stowed in carrier									
Offset	2°		15°		30°		45°		60°	
Working radius (m)	Boom angle (°)	Load (ton)	Boom angle (°)	Load (ton)	Boom angle (°)	Load (ton)	Boom angle (°)	Load (ton)	Boom angle (°)	Load (ton)
10.0	82.7	3.00								
12.0	81.4	3.00								
14.0	80.1	3.00	83.6	2.90						
16.0	78.8	3.00	82.3	2.90						
18.0	77.5	3.00	80.9	2.90						
20.0	76.1	3.00	79.5	2.90	82.5	1.95				
22.0	74.7	3.00	78.0	2.70	81.0	1.95	83.5	1.50		
24.0	73.3	3.00	76.5	2.55	79.4	1.95	81.9	1.50		
26.0	71.9	3.00	74.9	2.40	77.9	1.85	80.3	1.50	81.9	1.15
28.0	70.5	3.00	73.4	2.30	76.2	1.75	78.6	1.50	80.1	1.15
30.0	69.0	2.85	71.7	2.15	74.6	1.70	76.9	1.45	78.2	1.15
32.0	66.5	2.50	70.1	2.05	72.9	1.60	75.1	1.40	76.4	1.15
34.0			68.4	1.95	71.1	1.55	73.3	1.35	74.4	1.15
36.0					69.4	1.50	71.4	1.30	72.3	1.10
38.0							69.5	1.30	70.3	1.10
Critical boom angle (°)	66		67		68		68		68	
Standard hook	for 7.8 ton									
Hook mass	250kg									
Parts of line	1									

52m Boom + 26.6m SL Jib										
Specification SD1	Outriggers fully extended (8.4m) 360° full range, with 24ton or 16ton counterweight stowed in carrier									
Offset	2°		15°		30°		45°		60°	
Working radius (m)	Boom angle (°)	Load (ton)	Boom angle (°)	Load (ton)	Boom angle (°)	Load (ton)	Boom angle (°)	Load (ton)	Boom angle (°)	Load (ton)
12.0	82.2	2.00								
14.0	81.1	2.00								
16.0	79.9	2.00	84.1	1.85						
18.0	78.7	2.00	82.8	1.85						
20.0	77.5	2.00	81.6	1.85						
22.0	76.2	2.00	80.3	1.85	83.9	1.15				
24.0	75.0	2.00	78.9	1.75	82.5	1.15				
26.0	73.7	2.00	77.5	1.65	81.1	1.15				
28.0	72.4	2.00	76.1	1.60	79.7	1.15	82.8	0.85		
30.0	71.1	2.00	74.6	1.50	78.2	1.10	81.2	0.85	83.4	0.75
32.0	69.8	1.95	73.2	1.45	76.7	1.05	79.6	0.85	81.6	0.75
34.0	68.3	1.85	71.7	1.35	75.2	1.05	78.0	0.85	79.8	0.75
36.0			70.2	1.30	73.6	1.00	76.3	0.85	78.0	0.70
38.0			68.6	1.25	71.9	0.95	74.6	0.80	76.1	0.70
40.0					70.3	0.95	72.8	0.80	74.1	0.70
42.0							71.1	0.80	72.1	0.70
44.0									70.0	0.70
Critical boom angle (°)	67		68		69		69		69	
Standard hook	for 7.8 ton									
Hook mass	250kg									
Parts of line	1									

44m Boom + 9.2m SL Jib										
Specification SE1	Outriggers fully extended (8.4m) 360° full range, with 8.5ton counterweight stowed in carrier or without counterweight									
Offset	5°		15°		30°		45°		60°	
Working radius (m)	Boom angle (°)	Load (ton)	Boom angle (°)	Load (ton)	Boom angle (°)	Load (ton)	Boom angle (°)	Load (ton)	Boom angle (°)	Load (ton)
7.0	82.3	7.00								
8.0	81.3	7.00	82.9	7.00						
9.0	80.4	7.00	81.9	7.00						
10.0	79.4	7.00	80.8	7.00	82.8	5.90				
12.0	77.4	7.00	78.9	7.00	80.7	5.90	82.2	4.80		
14.0	75.4	7.00	76.9	7.00	78.6	5.90	80.0	4.80	80.9	3.90
16.0	73.4	7.00	74.9	7.00	76.5	5.60	77.8	4.80	78.6	3.90
18.0	71.3	7.00	72.8	6.60	74.3	5.35	75.5	4.65	76.2	3.85
20.0	69.2	6.40	70.5	6.05	72.1	5.10	73.2	4.50	73.9	3.80
22.0	66.6	4.70	68.1	5.20	69.7	4.85	70.9	4.40	71.3	3.75
24.0	64.0	3.30	65.5	3.75	67.3	4.30	68.4	4.10	68.9	3.75
26.0			62.7	2.55	64.6	3.05	65.8	3.40	66.2	3.55
Critical boom angle (°)	62		62		63		63		63	
Standard hook	for 7.8 ton									
Hook mass	250kg									
Parts of line	1									

44m Boom + 15.0m SL Jib										
Specification SE1	Outriggers fully extended (8.4m) 360° full range, with 8.5ton counterweight stowed in carrier or without counterweight									
Offset	2°		15°		30°		45°		60°	
Working radius (m)	Boom angle (°)	Load (ton)	Boom angle (°)	Load (ton)	Boom angle (°)	Load (ton)	Boom angle (°)	Load (ton)	Boom angle (°)	Load (ton)
8.0	82.4	4.00								
9.0	81.5	4.00								
10.0	80.6	4.00								
12.0	78.8	4.00	81.9	4.00						
14.0	77.0	4.00	80.1	4.00	83.0	3.15				
16.0	75.3	4.00	78.3	4.00	81.1	3.15	83.4	2.55		
18.0	73.4	4.00	76.4	4.00	79.2	3.15	81.4	2.55	83.1	2.00
20.0	71.6	4.00	74.4	3.85	77.1	3.00	79.3	2.55	80.8	2.00
22.0	69.7	4.00	72.5	3.60	75.1	2.85	77.2	2.45	78.5	2.00
24.0	67.7	4.00	70.4	3.40	72.9	2.75	75.0	2.35	76.2	1.95
26.0	65.4	3.10	68.3	3.20	70.8	2.60	72.7	2.30	73.8	1.95
28.0			66.2	2.90	68.6	2.50	70.5	2.25	71.4	1.90
30.0					66.3	2.40	68.1	2.15	68.8	1.90
32.0							65.6	2.10	66.2	1.90
Critical boom angle (°)	64		64		64		64		64	
Standard hook	for 7.8 ton									
Hook mass	250kg									
Parts of line	1									

44m Boom + 20.8m SL Jib										
Specification SE1	Outriggers fully extended (8.4m) 360° full range, with 8.5ton counterweight stowed in carrier or without counterweight									
Offset	2°		15°		30°		45°		60°	
Working radius (m)	Boom angle (°)	Load (ton)	Boom angle (°)	Load (ton)	Boom angle (°)	Load (ton)	Boom angle (°)	Load (ton)	Boom angle (°)	Load (ton)
9.0	82.6	3.75								
10.0	81.8	3.75								
12.0	80.3	3.75								
14.0	78.7	3.75	82.4	2.90						
16.0	77.1	3.75	80.8	2.90						
18.0	75.5	3.75	79.1	2.90	82.7	1.95				
20.0	73.9	3.75	77.3	2.75	81.0	1.95				
22.0	72.1	3.45	75.5	2.55	79.2	1.95	82.2	1.50		
24.0	70.3	3.20	73.7	2.40	77.3	1.85	80.3	1.50	82.4	1.20
26.0	68.5	2.95	71.8	2.25	75.3	1.75	78.2	1.50	80.1	1.20
28.0	66.6	2.75	69.9	2.10	73.4	1.70	76.2	1.45	77.9	1.20
30.0	64.5	2.20	68.0	2.00	71.4	1.60	74.1	1.40	75.7	1.15
32.0			66.0	1.90	69.3	1.55	71.8	1.35	73.2	1.15
34.0					67.3	1.50	69.6	1.30	70.8	1.15
36.0							67.4	1.30	68.2	1.15
38.0									65.5	1.10
Critical boom angle (°)	64		65		65		65		65	
Standard hook	for 7.8 ton									
Hook mass	250kg									
Parts of line	1									

44m Boom + 26.6m SL Jib										
Specification SE1	Outriggers fully extended (8.4m) 360° full range, with 8.5ton counterweight stowed in carrier or without counterweight									
Offset	2°		15°		30°		45°		60°	
Working radius (m)	Boom angle (°)	Load (ton)	Boom angle (°)	Load (ton)	Boom angle (°)	Load (ton)	Boom angle (°)	Load (ton)	Boom angle (°)	Load (ton)
10.0	82.6	2.20								
12.0	81.3	2.20								
14.0	79.8	2.20								
16.0	78.5	2.20	83.2	1.90						
18.0	77.0	2.20	81.7	1.90						
20.0	75.6	2.20	80.1	1.90						
22.0	74.1	2.20	78.6	1.80	83.0	1.20				
24.0	72.6	2.20	77.0	1.70	81.3	1.20				
26.0	71.2	2.20	75.3	1.60	79.7	1.20	83.3	0.90		
28.0	69.5	2.05	73.6	1.50	77.9	1.15	81.5	0.90		
30.0	67.8	1.90	71.8	1.40	76.0	1.10	79.6	0.90	82.1	0.75
32.0	66.0	1.75	70.1	1.35	74.2	1.05	77.6	0.85	80.0	0.75
34.0			68.2	1.25	72.4	1.00	75.6	0.85	77.7	0.75
36.0					70.4	0.95	73.5	0.80	75.4	0.70
38.0					68.6	0.95	71.4	0.80	73.0	0.70
40.0							69.2	0.80	70.6	0.70
42.0									67.9	0.70
Critical boom angle (°)	65		66		67		67		67	
Standard hook	for 7.8 ton									
Hook mass	250kg									
Parts of line	1									

48m Boom + 9.2m SL Jib										
Specification SE1	Outriggers fully extended (8.4m) 360° full range, with 8.5ton counterweight stowed in carrier or without counterweight									
Offset	5°		15°		30°		45°		60°	
Working radius (m)	Boom angle (°)	Load (ton)	Boom angle (°)	Load (ton)	Boom angle (°)	Load (ton)	Boom angle (°)	Load (ton)	Boom angle (°)	Load (ton)
7.0	82.9	6.00								
8.0	81.9	6.00								
9.0	81.1	6.00	82.5	6.00						
10.0	80.2	6.00	81.6	6.00						
12.0	78.4	6.00	79.8	6.00	81.7	5.90	82.9	4.80		
14.0	76.7	6.00	78.0	6.00	79.8	5.90	81.0	4.80	81.8	3.85
16.0	74.9	6.00	76.2	6.00	77.9	5.75	79.1	4.80	79.7	3.85
18.0	72.9	6.00	74.3	6.00	76.0	5.50	77.1	4.75	77.6	3.85
20.0	71.1	6.00	72.4	6.00	73.9	5.25	75.0	4.60	75.5	3.80
22.0	68.8	4.85	70.3	5.35	71.8	5.05	72.8	4.45	73.3	3.80
24.0	66.4	3.50	67.8	3.95	69.7	4.55	70.7	4.35	71.1	3.75
26.0					67.1	3.25	68.3	3.60	68.8	3.75
28.0							65.7	2.50	66.1	2.60
Critical boom angle (°)	65		65		65		65		65	
Standard hook	for 7.8 ton									
Hook mass	250kg									
Parts of line	1									

48m Boom + 15.0m SL Jib										
Specification SE1	Outriggers fully extended (8.4m) 360° full range, with 8.5ton counterweight stowed in carrier or without counterweight									
Offset	2°		15°		30°		45°		60°	
Working radius (m)	Boom angle (°)	Load (ton)	Boom angle (°)	Load (ton)	Boom angle (°)	Load (ton)	Boom angle (°)	Load (ton)	Boom angle (°)	Load (ton)
8.0	83.0	4.00								
9.0	82.2	4.00								
10.0	81.4	4.00								
12.0	79.8	4.00	82.7	4.00						
14.0	78.2	4.00	81.0	4.00	83.6	3.15				
16.0	76.5	4.00	79.4	4.00	81.9	3.15				
18.0	74.9	4.00	77.7	4.00	80.2	3.15	82.3	2.50		
20.0	73.2	4.00	75.9	3.95	78.4	3.05	80.4	2.50	81.7	2.00
22.0	71.5	4.00	74.2	3.75	76.6	2.95	78.4	2.50	79.7	2.00
24.0	69.8	4.00	72.3	3.50	74.6	2.80	76.5	2.40	77.6	1.95
26.0	67.7	3.25	70.4	3.35	72.7	2.70	74.5	2.35	75.5	1.95
28.0			68.5	3.05	70.7	2.60	72.4	2.25	73.2	1.90
30.0					68.7	2.50	70.3	2.20	71.1	1.90
32.0							68.1	2.15	68.7	1.90
Critical boom angle (°)	66		67		67		67		67	
Standard hook	for 7.8 ton									
Hook mass	250kg									
Parts of line	1									

Super luffing jib (Operation of SL jib)

48m Boom + 20.8m SL Jib										
Specification SE1 Outriggers fully extended (8.4m) 360° full range, with 8.5ton counterweight stowed in carrier or without counterweight										
Offset	2°		15°		30°		45°		60°	
Working radius (m)	Boom angle (°)	Load (ton)	Boom angle (°)	Load (ton)	Boom angle (°)	Load (ton)	Boom angle (°)	Load (ton)	Boom angle (°)	Load (ton)
9.0	83.1	3.50								
10.0	82.3	3.50								
12.0	80.9	3.50								
14.0	79.5	3.50	83.1	2.90						
16.0	78.0	3.50	81.6	2.90						
18.0	76.6	3.50	80.0	2.90	83.4	1.95				
20.0	75.1	3.50	78.4	2.80	81.8	1.95				
22.0	73.7	3.50	76.9	2.65	80.1	1.95	82.9	1.50		
24.0	72.0	3.35	75.2	2.50	78.4	1.90	81.1	1.50	83.0	1.20
26.0	70.4	3.10	73.4	2.35	76.6	1.80	79.3	1.50	81.2	1.20
28.0	68.6	2.90	71.7	2.20	74.9	1.75	77.4	1.45	79.1	1.20
30.0			70.0	2.10	73.1	1.65	75.5	1.40	77.0	1.15
32.0			68.1	1.95	71.2	1.60	73.5	1.35	74.9	1.15
34.0					69.3	1.50	71.6	1.35	72.7	1.15
36.0							69.4	1.30	70.4	1.10
Critical boom angle (°)	67		67		68		68		68	
Standard hook	for 7.8 ton									
Hook mass	250kg									
Parts of line	1									

48m Boom + 26.6m SL Jib										
Specification SE1 Outriggers fully extended (8.4m) 360° full range, with 8.5ton counterweight stowed in carrier or without counterweight										
Offset	2°		15°		30°		45°		60°	
Working radius (m)	Boom angle (°)	Load (ton)	Boom angle (°)	Load (ton)	Boom angle (°)	Load (ton)	Boom angle (°)	Load (ton)	Boom angle (°)	Load (ton)
10.0	83.1	2.10								
12.0	81.8	2.10								
14.0	80.5	2.10								
16.0	79.2	2.10	83.7	1.85						
18.0	77.9	2.10	82.3	1.85						
20.0	76.5	2.10	80.8	1.85						
22.0	75.2	2.10	79.5	1.85	83.5	1.20				
24.0	73.9	2.10	78.0	1.75	82.0	1.20				
26.0	72.4	2.10	76.4	1.65	80.4	1.20	83.9	0.90		
28.0	71.1	2.10	74.9	1.55	78.9	1.15	82.2	0.90		
30.0	69.6	2.00	73.3	1.45	77.3	1.10	80.5	0.90	82.8	0.75
32.0			71.7	1.40	75.6	1.05	78.6	0.85	80.9	0.75
34.0			70.0	1.30	73.8	1.00	76.8	0.85	78.8	0.75
36.0					72.1	1.00	75.0	0.80	76.7	0.70
38.0					70.3	0.95	73.1	0.80	74.7	0.70
40.0							71.2	0.80	72.4	0.70
42.0									70.1	0.70
Critical boom angle (°)	68		68		69		69		69	
Standard hook	for 7.8 ton									
Hook mass	250kg									
Parts of line	1									

52m Boom + 9.2m SL Jib										
Specification SE1 Outriggers fully extended (8.4m) 360° full range, with 8.5ton counterweight stowed in carrier or without counterweight										
Offset	5°		15°		30°		45°		60°	
Working radius (m)	Boom angle (°)	Load (ton)	Boom angle (°)	Load (ton)	Boom angle (°)	Load (ton)	Boom angle (°)	Load (ton)	Boom angle (°)	Load (ton)
8.0	82.5	5.20								
9.0	81.7	5.20								
10.0	80.9	5.20	82.2	5.20						
12.0	79.3	5.20	80.6	5.20	82.3	5.20				
14.0	77.7	5.20	79.0	5.20	80.7	5.20	81.9	4.80	82.5	3.85
16.0	76.0	5.20	77.3	5.20	79.0	5.20	80.2	4.80	80.7	3.85
18.0	74.4	5.20	75.6	5.20	77.3	5.20	78.4	4.80	78.9	3.85
20.0	72.7	5.20	73.9	5.20	75.6	5.20	76.6	4.65	77.0	3.85
22.0	70.8	4.85	72.2	5.20	73.8	5.15	74.6	4.55	75.0	3.80
24.0	68.6	3.55	70.0	4.00	71.7	4.60	72.7	4.40	73.1	3.75
26.0					69.4	3.40	70.6	3.80	71.0	3.75
28.0									68.5	2.85
Critical boom angle (°)	68		68		68		68		68	
Standard hook	for 7.8 ton									
Hook mass	250kg									
Parts of line	1									

52m Boom + 15.0m SL Jib										
Specification SE1 Outriggers fully extended (8.4m) 360° full range, with 8.5ton counterweight stowed in carrier or without counterweight										
Offset	2°		15°		30°		45°		60°	
Working radius (m)	Boom angle (°)	Load (ton)	Boom angle (°)	Load (ton)	Boom angle (°)	Load (ton)	Boom angle (°)	Load (ton)	Boom angle (°)	Load (ton)
9.0	82.8	4.00								
10.0	82.1	4.00								
12.0	80.6	4.00	83.3	4.00						
14.0	79.1	4.00	81.8	4.00						
16.0	77.7	4.00	80.3	4.00	82.6	3.10				
18.0	76.2	4.00	78.8	4.00	81.1	3.10	83.0	2.50		
20.0	74.7	4.00	77.3	4.00	79.5	3.10	81.3	2.50	82.5	1.95
22.0	73.2	4.00	75.6	3.85	77.8	3.00	79.6	2.50	80.7	1.95
24.0	71.6	4.00	74.0	3.65	76.1	2.85	77.8	2.45	78.8	1.95
26.0	69.6	3.20	72.3	3.45	74.4	2.75	76.0	2.35	76.9	1.95
28.0			70.5	3.10	72.6	2.65	74.2	2.30	74.9	1.95
30.0					70.7	2.55	72.2	2.25	73.0	1.90
32.0									70.9	1.90
Critical boom angle (°)	69		69		70		70		70	
Standard hook	for 7.8 ton									
Hook mass	250kg									
Parts of line	1									

52m Boom + 20.8m SL Jib										
Specification SE1 Outriggers fully extended (8.4m) 360° full range, with 8.5ton counterweight stowed in carrier or without counterweight										
Offset	2°		15°		30°		45°		60°	
Working radius (m)	Boom angle (°)	Load (ton)	Boom angle (°)	Load (ton)	Boom angle (°)	Load (ton)	Boom angle (°)	Load (ton)	Boom angle (°)	Load (ton)
10.0	82.7	3.00								
12.0	81.4	3.00								
14.0	80.1	3.00	83.6	2.90						
16.0	78.8	3.00	82.3	2.90						
18.0	77.5	3.00	80.9	2.90						
20.0	76.1	3.00	79.5	2.90	82.5	1.95				
22.0	74.7	3.00	78.0	2.70	81.0	1.95	83.5	1.50		
24.0	73.3	3.00	76.5	2.55	79.4	1.95	81.9	1.50		
26.0	71.9	3.00	74.9	2.40	77.9	1.85	80.3	1.50	81.9	1.15
28.0	70.5	3.00	73.4	2.30	76.2	1.75	78.6	1.50	80.1	1.15
30.0			71.7	2.15	74.6	1.70	76.9	1.45	78.2	1.15
32.0					72.9	1.60	75.1	1.40	76.4	1.15
34.0					71.1	1.55	73.3	1.35	74.4	1.15
36.0									72.3	1.10
Critical boom angle (°)	69		70		70		71		71	
Standard hook	for 7.8 ton									
Hook mass	250kg									
Parts of line	1									

52m Boom + 26.6m SL Jib										
Specification SE1 Outriggers fully extended (8.4m) 360° full range, with 8.5ton counterweight stowed in carrier or without counterweight										
Offset	2°		15°		30°		45°		60°	
Working radius (m)	Boom angle (°)	Load (ton)	Boom angle (°)	Load (ton)	Boom angle (°)	Load (ton)	Boom angle (°)	Load (ton)	Boom angle (°)	Load (ton)
12.0	82.2	2.00								
14.0	81.1	2.00								
16.0	79.9	2.00	84.1	1.85						
18.0	78.7	2.00	82.8	1.85						
20.0	77.5	2.00	81.6	1.85						
22.0	76.2	2.00	80.3	1.85	83.9	1.15				
24.0	75.0	2.00	78.9	1.75	82.5	1.15				
26.0	73.7	2.00	77.5	1.65	81.1	1.15				
28.0	72.4	2.00	76.1	1.60	79.7	1.15	82.8	0.85		
30.0	71.1	2.00	74.6	1.50	78.2	1.10	81.2	0.85	83.4	0.75
32.0			73.2	1.45	76.7	1.05	79.6	0.85	81.6	0.75
34.0			71.7	1.35	75.2	1.05	78.0	0.85	79.8	0.75
36.0					73.6	1.00	76.3	0.85	78.0	0.70
38.0					71.9	0.95	74.6	0.80	76.1	0.70
40.0							72.8	0.80	74.1	0.70
Critical boom angle (°)	70		71		71		72		72	
Standard hook	for 7.8 ton									
Hook mass	250kg									
Parts of line	1									

■Overall view

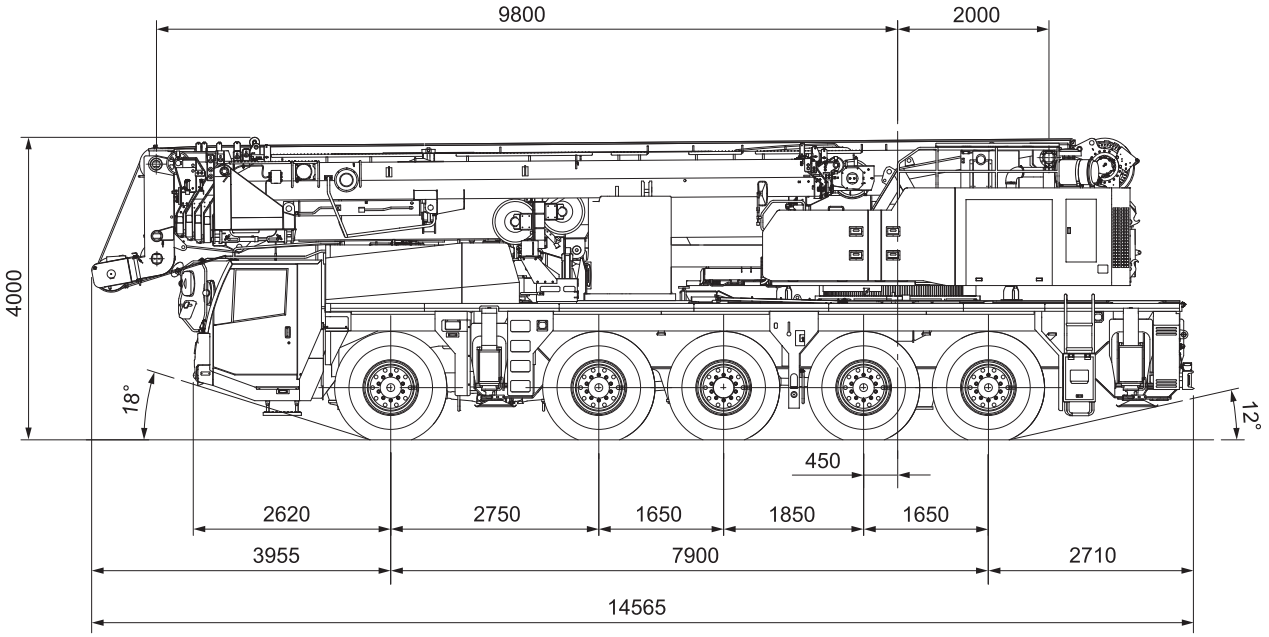

* Work site driving position
(with 16t counterweight mounted)

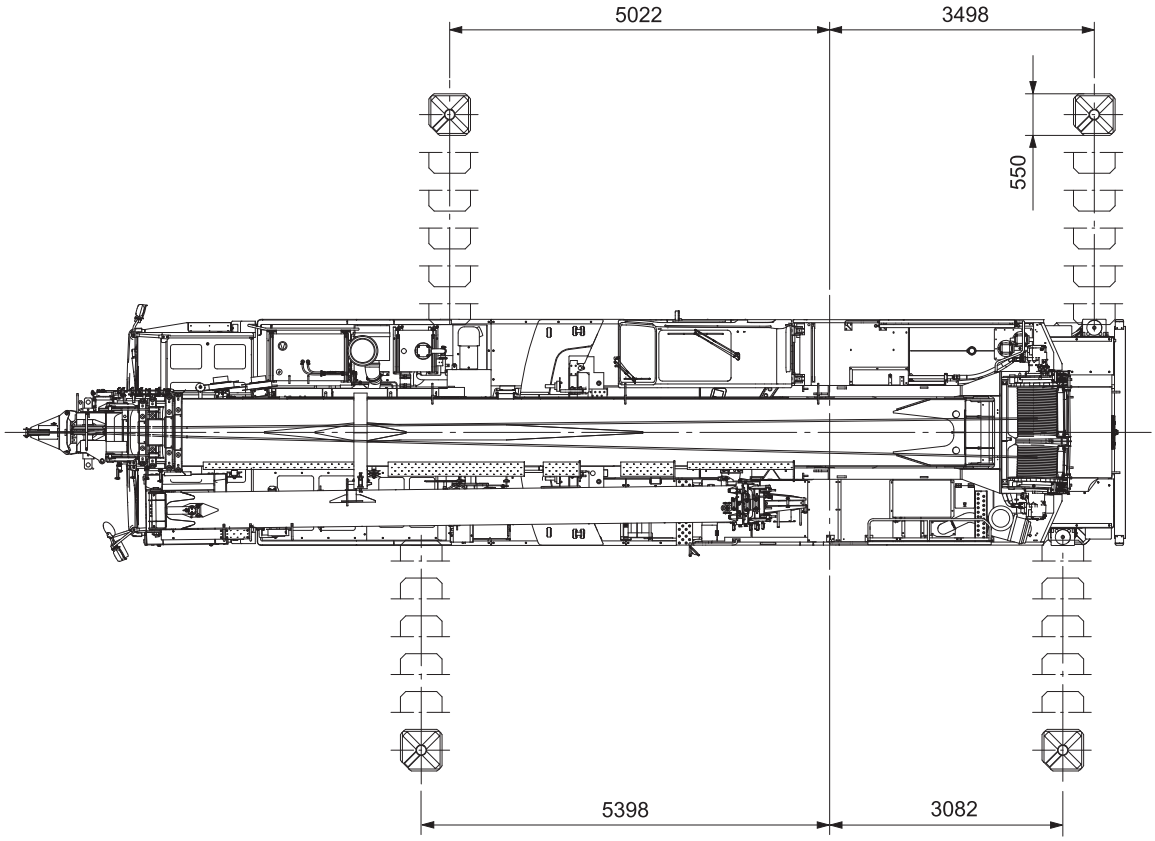

Reduced scale: 1/100 unit (mm)

■Overall view

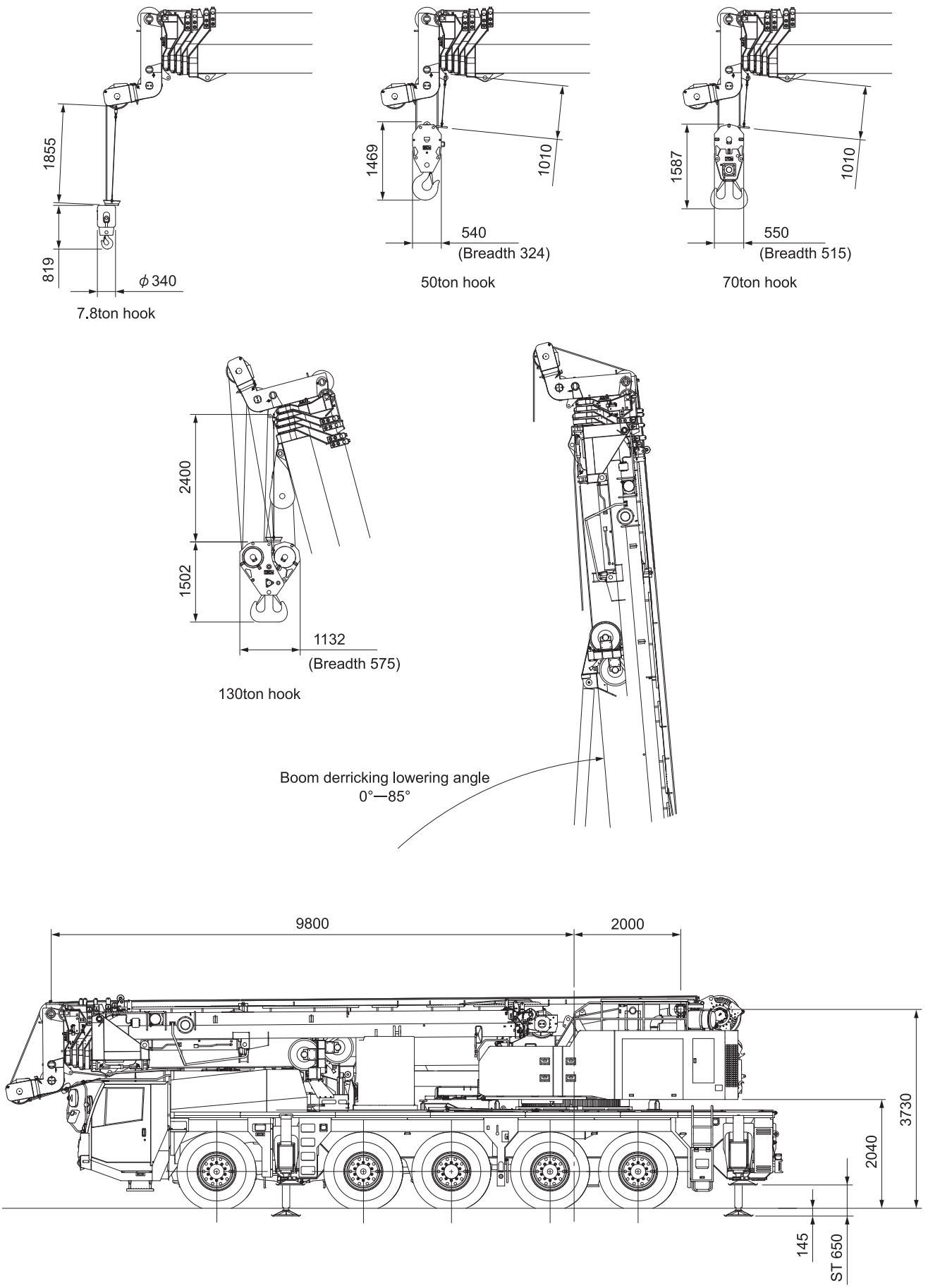

Reduced scale: 1/100 unit (mm)

■Overall view

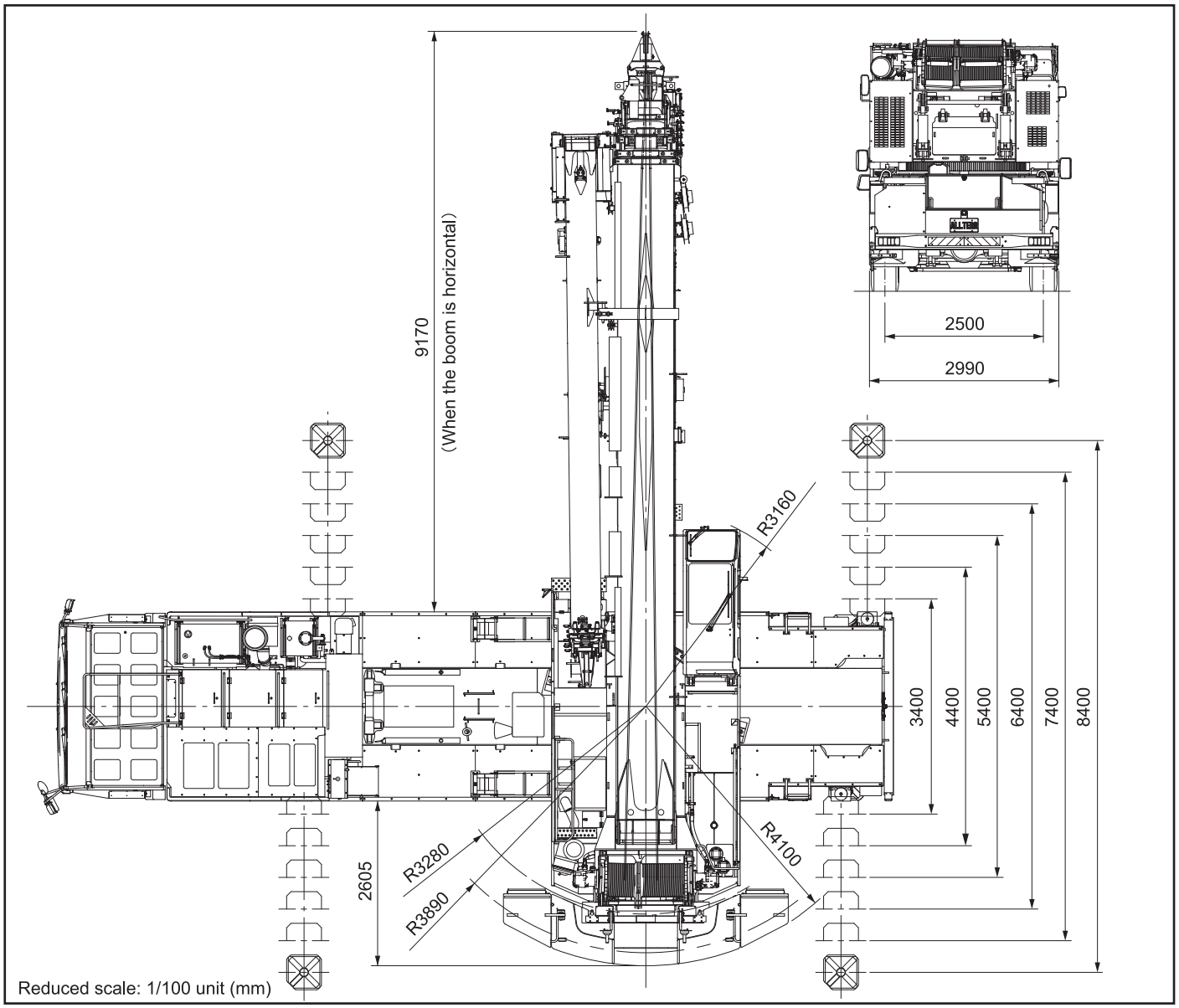

■Public road driving conditions

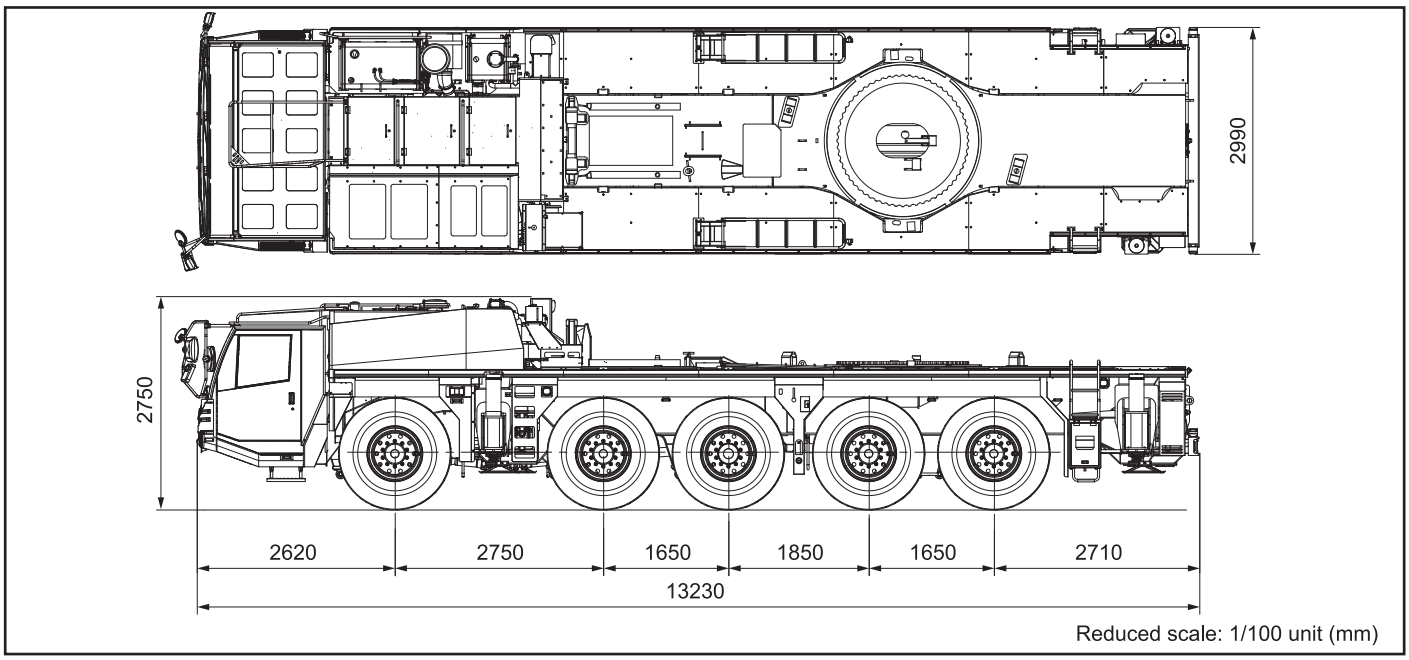

■Minimum right-angle passage width for machine with Jib

●When driving within work site

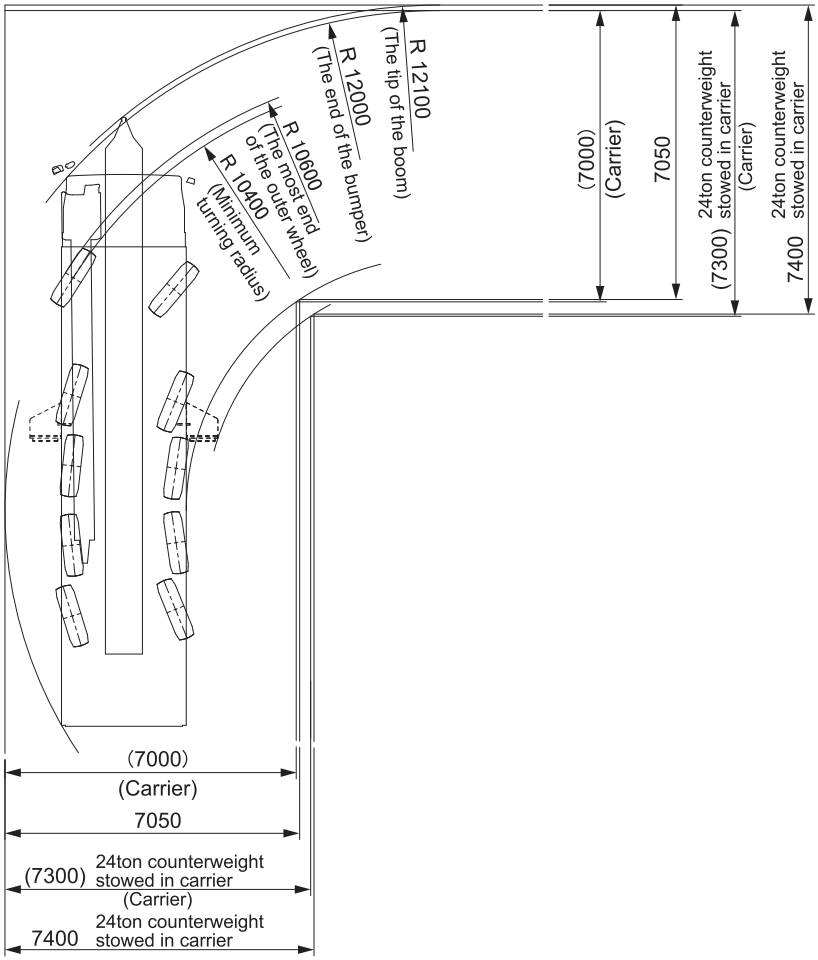

●When driving within work site (Special steering)

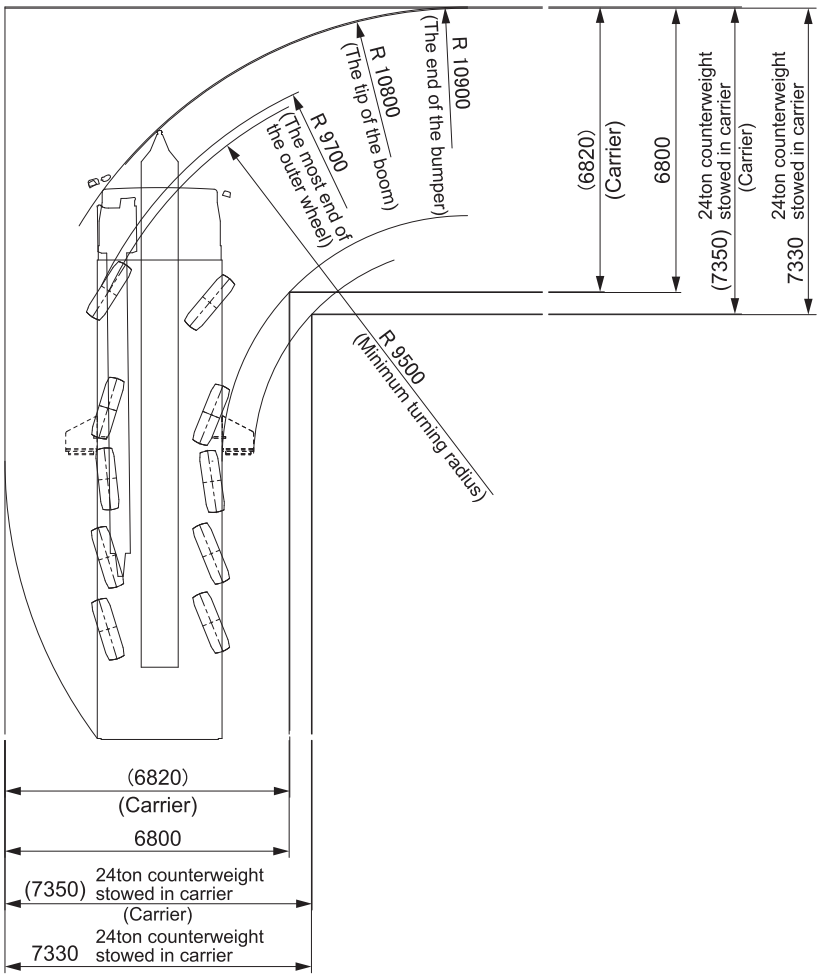

■Dimensions and weight

●Boom

unit (mm)

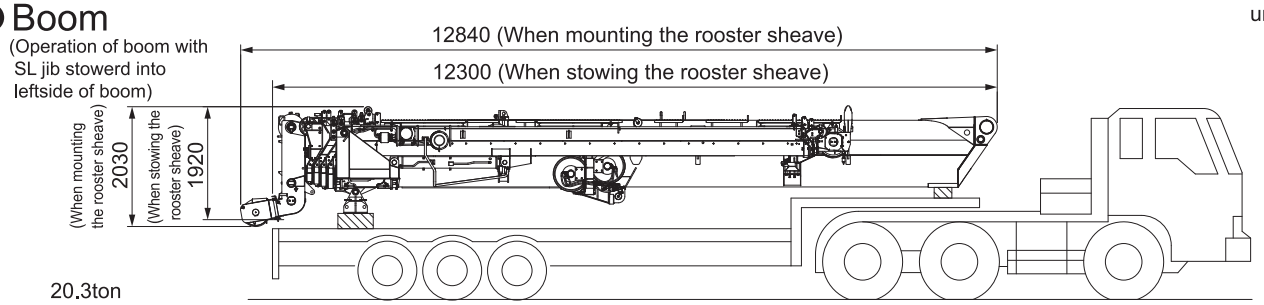

●Slewing upper structure

unit (mm)

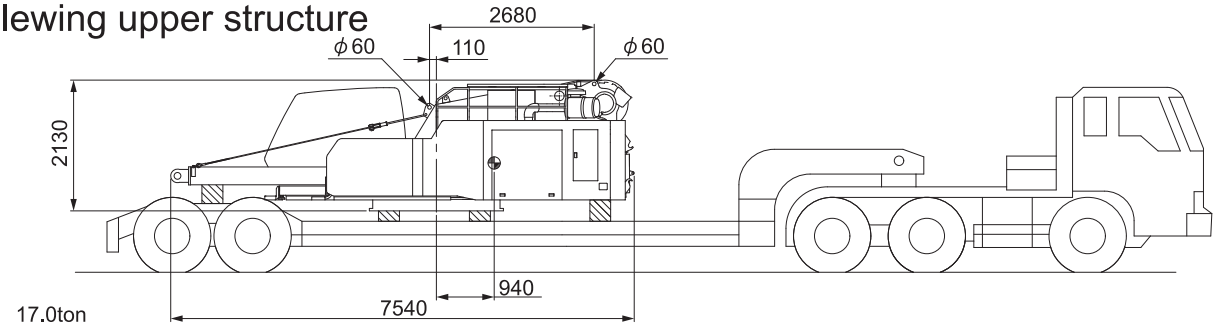

●Counterweight

unit (mm)

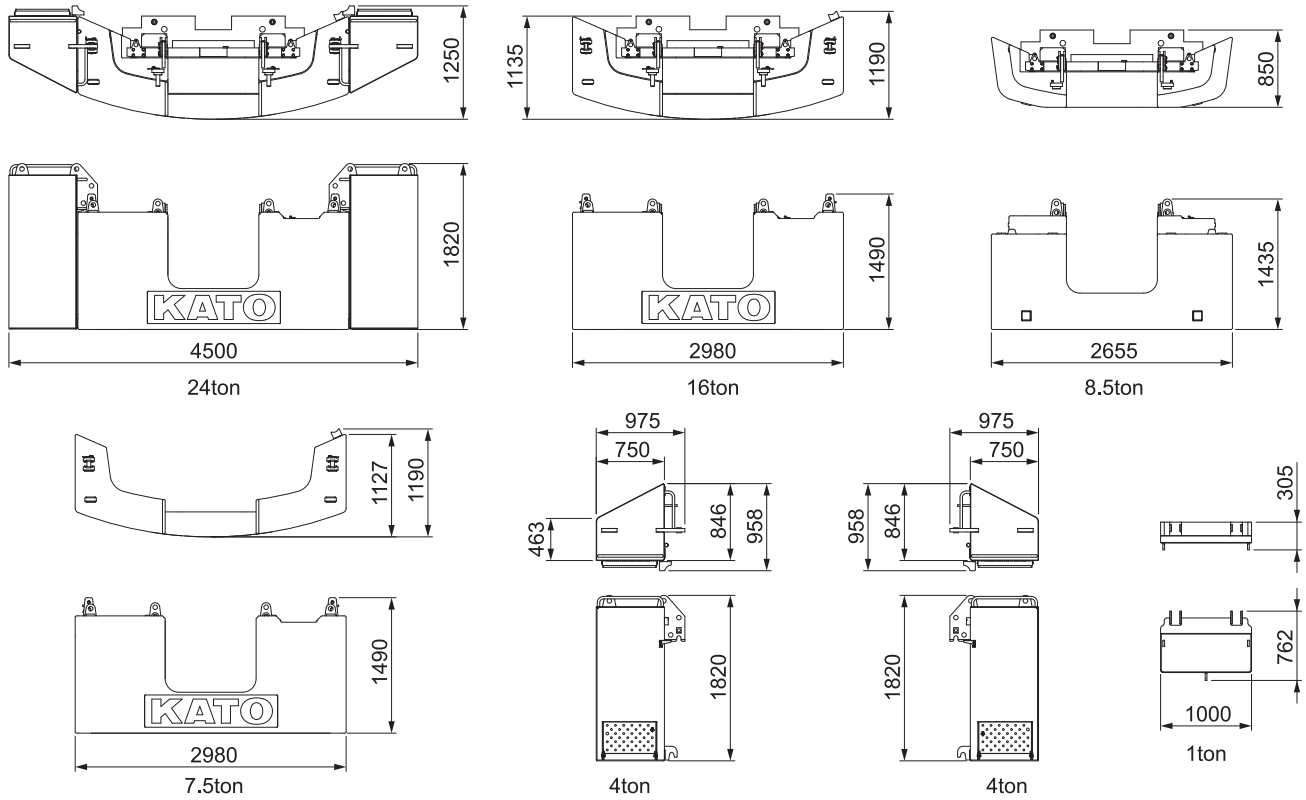

* KATO products and specifications are subject to improvements and changes without notice.

Address inquiries to:

KATO

KATO WORKS CO.,LTD.

9-37, Higashi-ohi 1-chome,Shinagawa-ku, Tokyo, 140-0011, Japan

Tel. : Head Office Tokyo (03) 3458-1111

Overseas Marketing Department. Tokyo (03) 3458-1115

Fax. : Tokyo (03) 3458-1163

URL http://www.kato-works.co.jp

C04172

3.2016-200 (TI) 2

ISO 9001 BUREAU VERITAS Certification

We acquired the "ISO 9001" certification which is an international standard for quality assurance.